BA317NE
Rugged one input Ex nA and Ex tc Tachometer

Issue 7

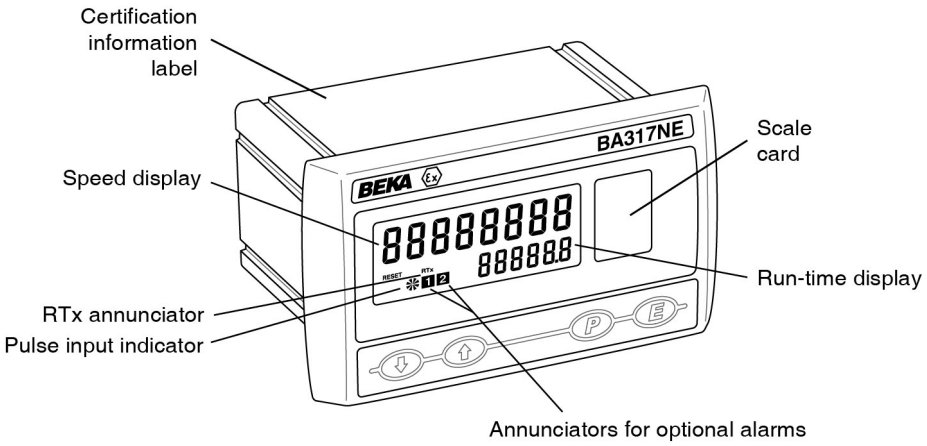

Issue: 7
9th July 2019

CONTENTS

The BA317NE is CE marked to show compliance with the European Explosive Atmospheres Directive 2014/34/EU and the European EMC Directive 2014/30/EU

CONTENTS CONTINUED

1. DESCRIPTION

This rugged Ex nA and Ex tc certified, one input Tachometer is primarily intended for measuring and displaying rotational speed within a Zone 2 or Zone 22 hazardous area without the need for Zener barriers or galvanic isolators. To assist with routine maintenance, it also includes a run-time clock that records the number of hours that the monitored machinery has been operating.

This instruction manual supplements the abbreviated instruction sheet supplied with each instrument.

The BA317NE has been certified Ex nA and Ex tc for use in gas and dust hazardous areas by Notified Body Intertek Testing and Certification Ltd and complies with the European ATEX Directive 2014/34/EU. It has a rugged stainless steel enclosure and an impact resistant glass window. In addition to normal Ex nA and Ex tc applications, the certification allows it to be installed in an Ex e, Ex n, Ex p or Ex t panel enclosure without invalidating the enclosure's certification.

For international applications the BA317NE also has IECEx certification which is described in Appendix 2.

For applications in the USA and Canada the BA317NE has ETL and cETL certification which is described in Appendix 3.

2. OPERATION

Fig 1 shows a simplified block diagram of the BA317NE Tachometer. The instruments can accept pulses from most types of sensor and display speed per second, minute or per hour, plus run-time in hours on a separate display.

The BA317NE has a single pair of input terminals for connection to all types of sensor. When connected to a sensor requiring energising, such as a switch contact, open collector or a two wire proximity detector, an external link between terminals 3 and 4 connects power to the sensor input terminals.

Factory fitted optional accessories are shown below:

Backlight

Isolated dual alarms
or
Isolated 4/20mA output
or
Isolated pulse output

Only one output option may be fitted

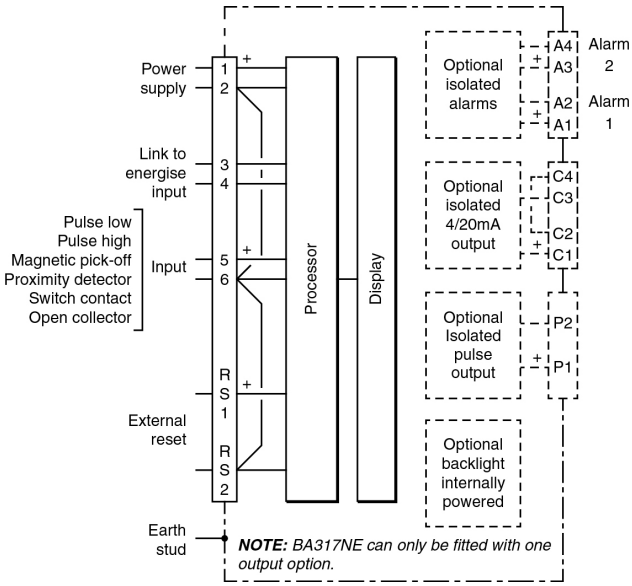

Fig 1 BA317NE

2.1 Initialisation

Each time power is applied to a Tachometer initialisation is performed. After a short delay the following display sequence occurs:

All segments of the display are activated

Tachometer starts functioning, using the configuration information stored in the instrument's permanent memory. Unless the run-time display has been reset to zero, new elapsed time will be added to the existing run-time total.

2.2 Controls

The BA317NE is controlled and configured via four front panel push buttons. In the display mode i.e. when the instrument is displaying speed the push button functions are:

Push Button Functions

▼ + ▲ To reset run-time to zero press buttons simultaneously for three seconds or longer. This is a configurable function. See 6.15

E + ▲ To reset grand total run-time to zero press buttons simultaneously for ten seconds or longer. This is a configurable function. See 6.16

P + ▼ Shows in succession, firmware version number, instrument function tACHo and any output accessories that are fitted:

- A Dual alarm outputs
- P Pulse output
- C 4/20mA output

P + E Access to configuration menu

Note: When optional alarms are fitted, the Tachometer may be configured to provide direct access to the alarm setpoints from the display mode when the P + ▲ buttons are operated.
See 9.4.13 and 9.4.14

2.3 Displays

The BA317NE has two digital displays and associated annunciators, plus a pulse input indicator as shown on front cover of this manual.

Speed display On upper eight digit display

Run-time display On lower six digit display. Shows time in hours, with a resolution of 0.1 hours, that monitored machinery has been operating. May be turned off. See 6.8

Pulse input indicator This disc in the lower left hand corner of the display 'rotates' for two seconds each time an input pulse is received. Appears to rotate continuously when input frequency exceeds 0.5Hz.

Hold annunciator Activated when input frequency is below the clip-off threshold at which the run-time timer stops functioning.

Reset annunciator Activated while run-time display is being reset to zero.

Grand total annunciator Activated while run-time grand total which is shown in hours is being displayed.

RTx annunciator Retransmitted pulse annunciator.
Depends upon the setting of SourCE in the pulse output configuration menu.

SCALEd
Annunciator activated each time pulse output open collector is *on*, i.e. Ron is less than 60Ω + 3V.

diREC:
Annunciator ***c***ontinuously activated.

3. CERTIFICATION

The BA317NE has ATEX and IECEx Ex nA gas and Ex tc dust certification. The main sections of this instruction manual describes ATEX gas certification. ATEX dust certification is described in Appendix 1 and IECEx gas and dust certification in Appendix 2.

3.1 ATEX Ex nA certification

Notified Body Intertek Testing and Certification Ltd have issued the BA317NE with a Type Examination Certificate number ITS16ATEX48409X. This has been used to confirm compliance with the European ATEX Directive for Group II, Category 3G equipment. The instrument carries the Community Mark and, subject to local codes of practice, may be installed in any of the European Economic Area (EEA) member countries and in the EEA EFTA states, Iceland, Liechtenstein and Norway. ATEX certificates are also acceptable in Switzerland and Turkey. The European Commission's Blue Guide lists the member states, overseas countries and territories that have adopted harmonisation legislation.

This section of the instruction manual describes ATEX installations in explosive gas atmospheres conforming with EN 60079-14 *Electrical installations design, selection and erection*. When designing systems for installation outside the UK the local Code of Practice should be consulted.

3.2 Zones, gas groups and T rating

The Tachometer has been certified as Group II Category 3G Ex ic nA IIC T5 Gc –40°C ≥ Ta ≥ +60°C apparatus. This is non-sparking apparatus complying with EN 60079-15 *Equipment protection by type of protection 'n'* that minimises the risk of arcs or sparks capable of creating an ignition hazard occurring during conditions of normal operation.

The Tachometer's front panel push button contacts are non incendive and have been certified intrinsically safe Ex ic, without the need for an external Zener barrier or galvanic isolator, as shown on the Type Examination Certificate. This allows the Tachometer to be adjusted and configured live when installed in a Ex n panel enclosure located in Zone 2.

When connected to a suitable system and correctly mounted in a panel enclosure complying with the requirements for Type of protection 'n', the panel enclosure containing the BA317NE Tachometer may be installed in:

Zone 2 explosive gas air mixture not likely to occur, and if it does will only exist for a short time.

Be used with gases in groups:

Group A propane
Group B ethylene
Group C hydrogen

In gases that may safely be used with equipment having a temperature classification of:

T1	450°C
T2	300°C
T3	200°C
T4	135°C
T5	100°C

At ambient temperatures between -40 and +60°C.

This allows use with all commonly used industrial gases except carbon disulphide CS_2.

3.3 Special conditions for safe use

Special conditions for safe use are specified by the Ex nA certificate indicated by the certificate number's 'X' suffix. These state that the BA317NE Tachometer should be:

a. Mounted such that the instrument terminals are protected by at least an IP54 enclosure certified to IEC 60079-0 or IEC 60079-15 as appropriate.

b. Be supplied from limited energy circuits with output parameters in normal operation equal to, or less than the instruments input parameters.

These special conditions for safe use can be satisfied by mounting the BA317NE in an Ex n, Ex e or Ex p panel enclosure. For ATEX Category 3 installations in Zone 2, self or third party certified Ex n, Ex e or Ex p panel enclosures may be used. Additional requirement apply for non-metallic panel enclosures.

3.4 Power supply

The input safety parameters for the power supply terminals 1 and 2 are:

Ui = 30dc
Ii = 100mA

This allows the BA317NE to be powered from any dc supply which in normal operation has an output voltage of less than 30V. See section 4.1 for power supply recommendations.

3.5 Pulse input

The BA317NE Tachometers has a single pair of pulse input terminals 5 and 6 that may be configured for use with different types of sensor.

For sensors that require energising to determine their state, such as switch contacts or a 2-wire proximity detector, an external link between terminals 3 & 4 of the BA317NE connects an internal 7V, 6mA supply to the input terminals. Energising is not required when the Tachometer input is connected to a voltage pulse source.

Fitting an external link between terminals 3 & 4 changes the Tachometer's pulse input safety parameters in normal operation as shown below. This table also shows the types of sensor requiring energising (link fitting).

		Safety parameters		
		Input	Output	
Type of input	**Link 3 & 4**	**Ui**	**Uo**	**Io**
Switch contact	Yes	15V	10.5V	9.2mA
Proximity detector	Yes	15V	10.5V	9.2mA
Open collector	Yes	15V	10.5V	9.2mA
Magnetic pick-off	No	30V	1.1V	0.5mA
Voltage input (low)	No	30V	1.1V	0.5mA
Voltage input (high)	No	30V	1.1V	0.5mA

3.6 Remote reset terminals

The BA317NE total display my be reset to zero by connecting the external reset terminals RS1 and RS2 together for more than one second. The two reset terminals have the following safety parameters in normal operation:

Ui = 30V
Uo = 3.8V
Io = 1mA

3.7 Certification label information

The Tachometer certification information label is fitted in a recess on the top outer surface of the enclosure. It shows the ATEX and IECEx certification information plus BEKA associates name, location, year of manufacture and the instrument serial number.

BA317NE Certification information label

4. SYSTEM DESIGN FOR HAZARDOUS AREAS

When correctly installed in Zone 2 the BA317NE Totaliser may be connected to almost any apparatus in the safe area and to Ex n, Ex e, Ex p and Ex d protected apparatus located in Zone 2. Because the BA317NE is not certified intrinsically safe it should not be connected to an intrinsically safe system.

BEKA Application Guide AG310, *Guide for Installation of [extra low voltage d.c.] Ex nA instrumentation*, which can be downloaded from www.beka.co.uk, contains explanations and recommendations for the installation of Ex nA equipment.

In addition to being able to be connected to other equipment in the safe area and in Zone 2, the BA317NE may also be connected to suitably protected and certified equipment located in Zone 1. This is illustrated in Fig 5 and explained in Application Guide AG310.

There are four design requirements:

1. The BA317NE must be installed in a panel enclosure complying with the requirements for Ex n protection as shown in section 5 of this manual.

2. The BA317NE should be powered from a circuit that has output safety parameters in normal operation equal to, or less than, the input safety parameters for terminals 1 and 2 specified by the BA337NG ATEX Type Examination Certificate.

3. Hazardous area apparatus to which the BA317NE is connected should be protected by a technique suitable for the Zone in which the equipment is located such as Ex n or Ex e if located in Zone 2. Equipment protected by intrinsic safety should not be connected to a BA317NE.

4. Wiring should comply with Clause 9 of EN 60079-14.

When designing a system it is important to remember that terminals 2, 6 and RS2 are interconnected within the BA317NE. See Fig 1.

4.1 Power supply

The BA317NE Totaliser require a minimum of 10V between terminal 1 & 2 and consumes:

	10mA	without optional backlight
plus	6mA	when terminals 3 & 4 are linked

A 24V dc regulated supply with a current limit located in a safe area is suitable. The power supply should meet the requirements for personnel safety so that 'live maintenance' can safely be performed. The implicit requirement for galvanic isolation from the mains supply ensures that the possible difficulties from circulating earth currents caused by mains faults is minimised. In European terms if the power supply is CE marked it is almost certainly acceptable.

To comply with the requirements of EN 60079:*14 Electrical installations design, selection and erection*, each of the wires entering the hazardous area should be individually fused and contain a means of isolation. These two requirements may be satisfied by using DIN rail mounted terminals incorporating an easily removable fuse which can be extracted to achieve isolation as shown in Fig 2. Clear identification of, and easy access to the means of isolation is essential for their effective use. It is also necessary to ensure that the maintenance procedure makes sure that unauthorised re-closure of the switches does not occur. It is not considered necessary to have a means of isolation or electrical protection for the screen.

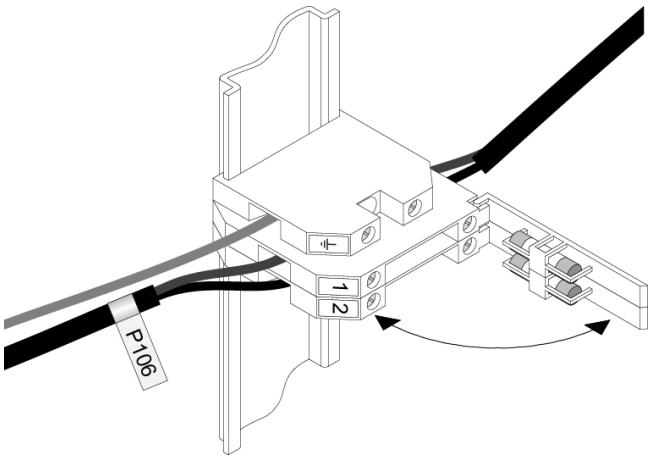

Fig 2 DIN rail mounting terminals incorporating a fuse

For some applications Ex nA instrumentation energised by a current limited power supply or instrument that can be switched off, is considered adequate and to comply with the requirements of the standard.

4.2 Pulse input

The BA317NE can display speed and run-time from a wide variety of pulse outputs speed sensors located in a Zone 2 hazardous areas or in a safe area.

Fig 3 shows the connections when the sensor is located in Zone 2 and Fig 4 the connections required when the sensor is in a safe area.

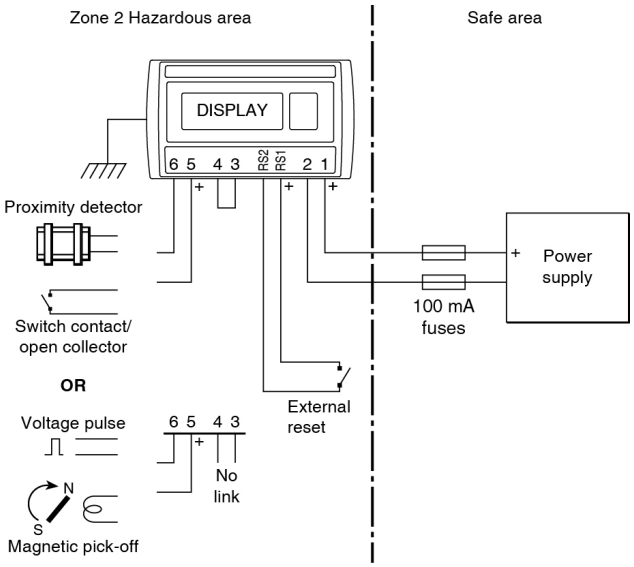

Fig 3 Connections for sensor in Zone 2

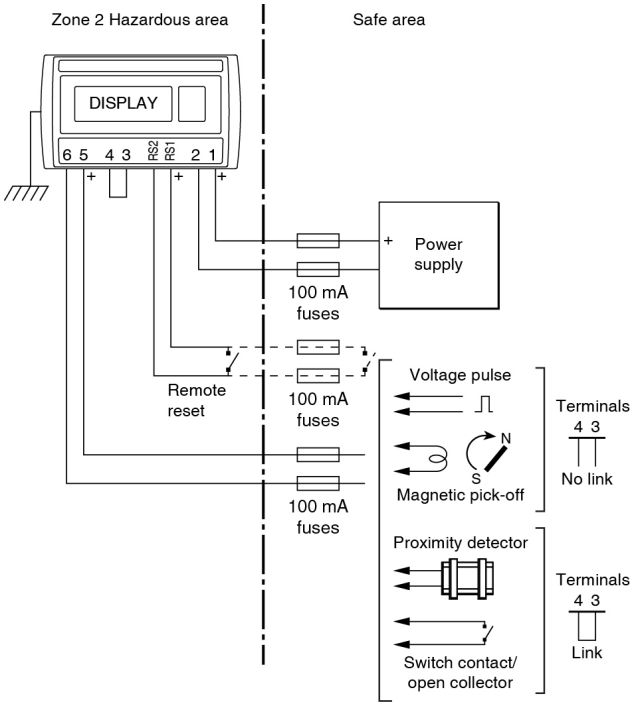

Fig 4 Connections for sensor in safe area

Providing the BA317NE Tachometer is correctly installed in an Ex n panel enclosure located in Zone 2, the input terminals may be connected to a certified speed sensor located in Zone 1 as shown in Fig 5. The speed sensor should have Ex e or Ex d certification permitting installation in Zone 1. Intrinsically safe Ex i certified flowmeter sensors should not be used.

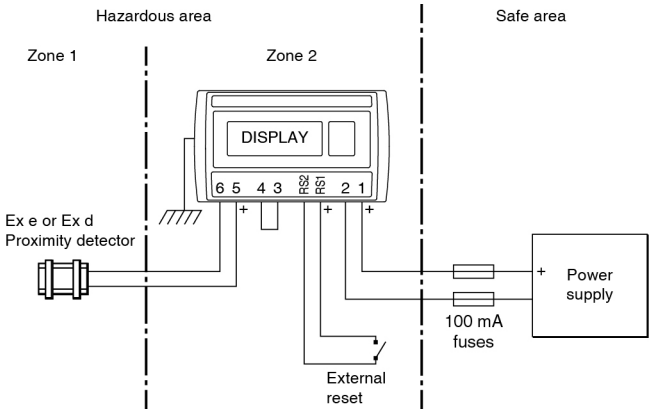

Fig 5 Connection to an Ex d or Ex e sensor in Zone 1

4.2.1 Input switching thresholds

For reliable operation the Tachometer pulse input must fall below the lower threshold and rise above the upper thresholds shown in the following table.

Input transducer	Switching thresholds	
	Lower	Upper
Open collector	2kΩ	10kΩ
Voltage pulse low	1.0V	3.0V
Voltage pulse high	3.0V	10.0V
Magnetic pick-off	0mV	40mV peak
Proximity detector	1.2mA	2.1mA
Switch	100Ω	1000Ω

Speed sensors with a switch contact, proximity detector or an open collector output require energising which is achieved by linking Totaliser terminals 3 and 4.

4.2.2 Switch contact input

Any mechanically or magnetically activated switch contact speed sensor located in Zone 2 or in the safe area may be directly connected to the pulse input terminals 5 and 6 which are non incendive, providing the sensor and associated wiring can withstand a 500V rms insulation test to earth. Most magnetically activated reed relays comply with these requirements. The BA317NE contains a configurable debounce circuit to prevent contact bounce being counted. See section 6.7.

4.2.3 Open collector input

Open collector sensors located in Zone 2 or in the safe area may be directly connected to input terminals 5 & 6 providing the sensor and associated wiring can withstand a 500V rms insulation test to earth.

The BA317NE contains a configurable debounce circuit to prevent false triggering. See section 6.7.

4.2.4 2-wire proximity detector input

Most Zone 2 certified NAMUR 2-wire proximity detectors may be directly connected to a BA317NE input terminals 5 & 6, providing the minimum operating voltage of the proximity detector is greater than 7.5V. The sensor and the associated wiring should be able to withstand a 500V rms insulation test to earth.

The BA317NE contains a configurable debounce circuit to prevent false triggering. See section 6.7.

4.2.5 Magnetic pick-off input

Magnetic pick-off speed sensors usually have a low level ac voltage output which a BA317NE Tachometer can sense when configured for a Coil input. The Tachometer input terminals 5 and 6 may be connected to any Zone 2 certified magnetic pick-off output sensor, providing the output in normal operation is equal to or less than 30V the Totaliser's Ui. The sensor and associated wiring should be able to withstand a 500V rms insulation test to earth.

The BA317NE contains a configurable debounce circuit to prevent false triggering. See section 6.7.

4.2.6 Voltage pulse input

Two voltage pulse input ranges are selectable in the BA317NE Tachometer configuration menu, VoLt5L and VoLt5H. The Tachometer input terminals 5 and 6 may be connected to any Zone 2 certified voltage pulse output sensor, providing the output in normal operation is equal to or less than 30V the Totaliser's Ui. The sensor and associated wiring should be able to withstand a 500V rms insulation test to earth.

The BA317NE contains a configurable debounce circuit to prevent false triggering. See section 6.7.

4.3 Remote reset

The BA317NE Tachometer's run-time display may be remotely reset to zero by connecting terminals RS1 and RS2 together. Permanent interconnection inhibits the run-time clock. Remote resetting may be accomplished by any mechanically operated switch located in Zone 2 as the Tachometerr's reset circuit is non incendive. The reset switch and the associated wiring should be able to withstand a 500V rms insulation test to earth.

A BA317NE may also be remotely reset from the safe area. Any switch may be used. Fig 4 illustrates how a BA317NE may be reset from both the safe and the hazardous area.

The BA317NE run-time display may also be reset when the ▼ and ▲ push buttons are operated simultaneously in the operating mode i.e. when the instrument is displaying speed. See 6.19

5. INSTALLATION

5.1 Location

When installed in a panel enclosure complying with the requirements for Ex n protection as shown in section 3.2 of this manual, the BA317NE may be located in a Zone 2 hazardous area providing that the operating temperature is between –40°C and +60°C and the installation complies with the Tachometers certification requirements. Certified Ex e panel enclosures are frequently used as Ex n panel enclosures.

The BA317NE Tachometer has a stainless steel housings with a 7J front of panel impact resistance incorporating a 10mm thick toughened glass window which can withstand a 4J impact. This, together with a captive silicone gasket which seals the joint between the instrument and the panel, enclosure provides IP66 ingress protection. The BA317NE has IP20 rear protection.

Although the front of the BA317NE Tachometer has IP66 protection, it should be shielded from continuous direct sunlight and severe weather conditions.

Fig 6 shows the overall dimensions of the BA317NE together with the recommended panel enclosure cut-out dimensions.

5.2 Installation Procedure

a. Cut the aperture specified in Fig 6 into the panel enclosure. Ensure that the edges of aperture are de-burred.

b. Inspect the Tachometer's captive gasket and ensure that it is not damaged before inserting it into the panel enclosure aperture.

c. If the enclosure panel is less than 1.0mm thick, or is non-metallic, an optional BEKA stainless steel support plate should be slid over the rear of the indicator before the panel clamps are fitted to evenly distribute the clamping force and prevent the enclosure panel being distorted or creeping.

d. Slide a panel clamp into the two grooves at each corner of the indicator housing with the M3 stud protruding through the hole at the rear of the clamp. Fit the stainless steel spring washer over the stud and secure with the stainless steel wing nut.

e. Evenly tighten the four clamps to secure the instrument. The recommended minimum tightening torque for each wing nut is 22cNm (1.95 lbf in).

f. Connect the panel enclosure wiring to the rear terminal blocks. To simplify installation, the terminals are removable so that wiring can be completed before the instrument is installed. Wiring should be supported to prevent damage resulting from vibration.

g. Finally, fit a silicone rubber push-on cap to the end of each M3 threaded rod.

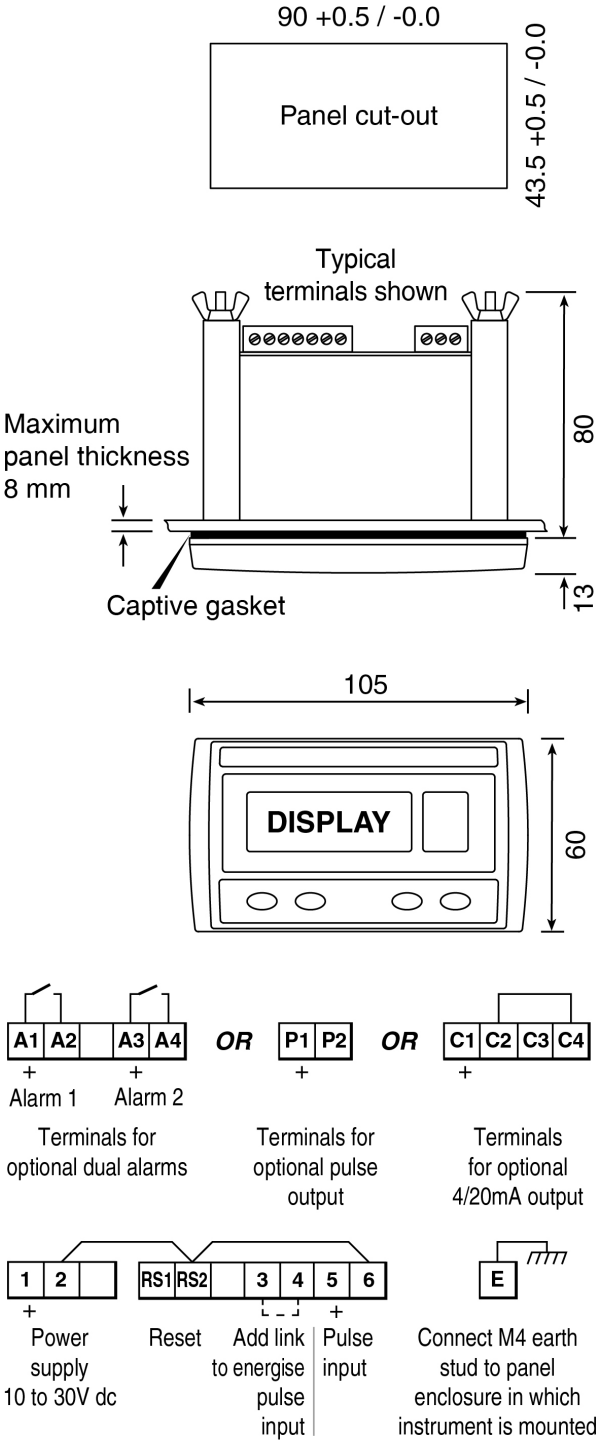

Support panel wiring to prevent vibration damage

Note: Optional backlight is internally powered

Fig 6 BA317NE dimensions and terminals

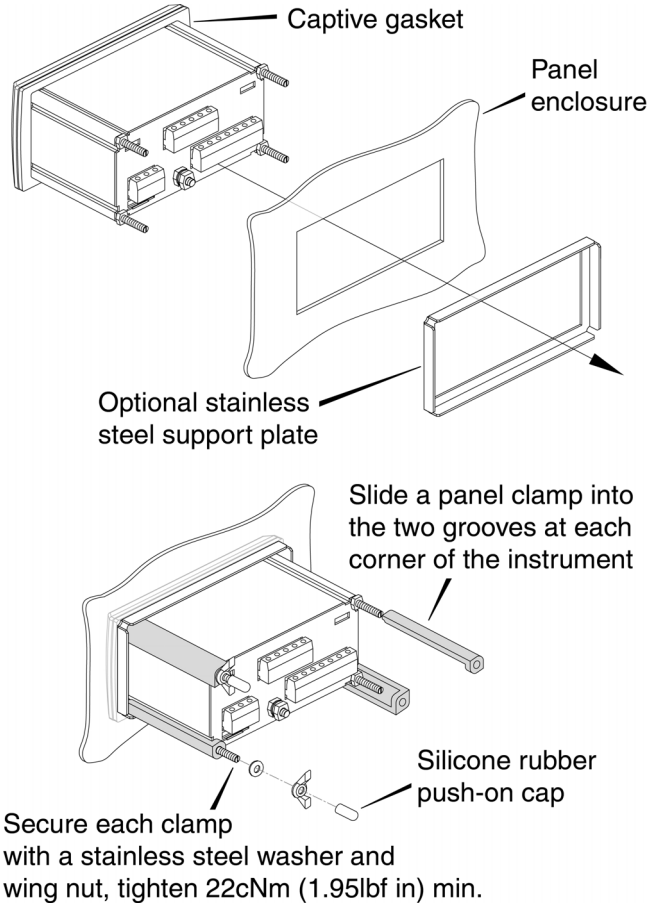

Fig 7 Installation procedure

5.3 Tachometer earthing

The BA317NE has an M4 earth stud on the rear panel which should be electrically connected to the panel enclosure in which the Tachometer is mounted, or to the plant equipotential conductor.

5.4 EMC

The BA317NE complies with the requirements of the European EMC Directive 2014/30/EU. For specified immunity all wiring should be in screened twisted pairs, with the screens earthed in the safe area.

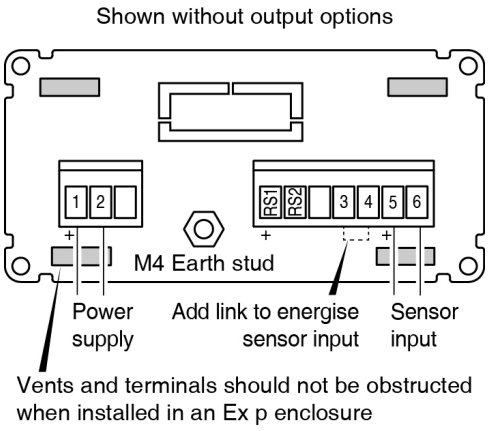

Fig 8 Rear terminals

5.5 Scale card

The Tachometer's units of measurement are shown on a printed scale card in a window at the right hand side of the display. The scale card is mounted on a flexible strip that is inserted into a slot at the rear of the instrument as shown in Fig 9. Thus the scale card can easily be changed without dismantling the indicator or removing it from the Ex n enclosure in which it is mounted.

New Tachometers are supplied with a printed scale card showing the requested units of measurement, if this information is not supplied when the instrument is ordered a blank card will be fitted.

A pack of self-adhesive scale cards printed with common units of measurement is available as an accessory from BEKA associates. Custom printed scale cards can also be supplied.

To change a scale card, unclip the protruding end of the flexible strip by gently pushing it upwards and pulling it out of the enclosure. Peel the existing scale card from the flexible strip and replace it with a new printed card, which should be aligned as shown below. Do not fit a new scale card on top of an existing card.

Install the new scale card by gently pushing the flexible strip into the slot at the rear of the Tachometer, when it reaches the internal end-stop secure it by pushing the end of the flexible strip downwards so that the tapered section is held by the Tachometer rear panel.

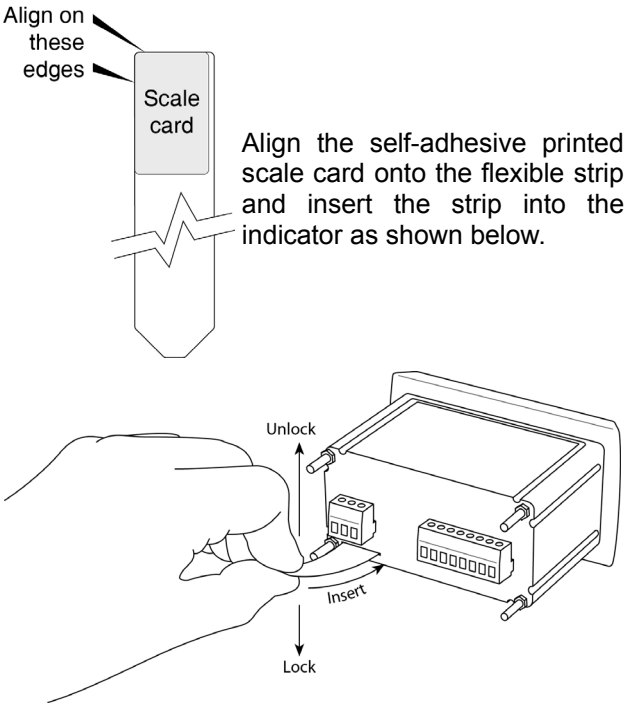

Fig 9 Inserting flexible strip carrying scale card into slot at the rear of Tachometer.

6.0 CONFIGURATION & CALIBRATION

The BA317NE Tachometer is configured and calibrated via four front panel push buttons. All the configuration functions are contained in an easy to use intuitive menu that is shown diagrammatically in Fig 11.

Each menu function is summarised in section 6.3 of this manual and each summary includes a reference to more detailed information.

When factory fitted optional alarms, pulse output or 4/20mA output are included, additional functions appear in the configuration menu, which are described separately in section 9.

All new Tachometers are supplied calibrated as requested at the time of ordering. If calibration is not requested, the Tachometer will have default configuration as shown in the following table, but can easily be re-configured on-site.

Function	Display	Default
Input	inP.tYPE	oP.CoL
Debounce	dEbounCE	dEFAuLt
Update	uPdAtE	0.5
Run-time display	di SP-2	on
Decimal point (speed)	dP	0000.0
Speed scale factor	SCALE.S	001.00
Timebase	t-bASE	tb-60
Filter	FiLtEr	24
Clip-off	CLP-oFF	0000.0
Local run-time reset	CLr tot	oFF
Local grand total run-time reset.	CLr Gtot	oFF
Security code	CodE	0000

6.1 Calibration structure

Fig 10 shows the BA317NE calibration structure. The pulse input is divided by SCALE.S to provide the required Tachometer speed display in engineering units. e.g. if a sensor monitoring a rotating shaft generates 18 pulses per revolution, to produce a display in revolutions SCALE.S should be set to 18.0.

The timebase t-bASE is a multiplying factor that determines whether the Tachometer displays speed per second, per minute or per hour.

The Tachometer incorporates a run-time clock that displays the time in hours that the speed of the monitored machinery has been equal to or greater than the Clip-off value.

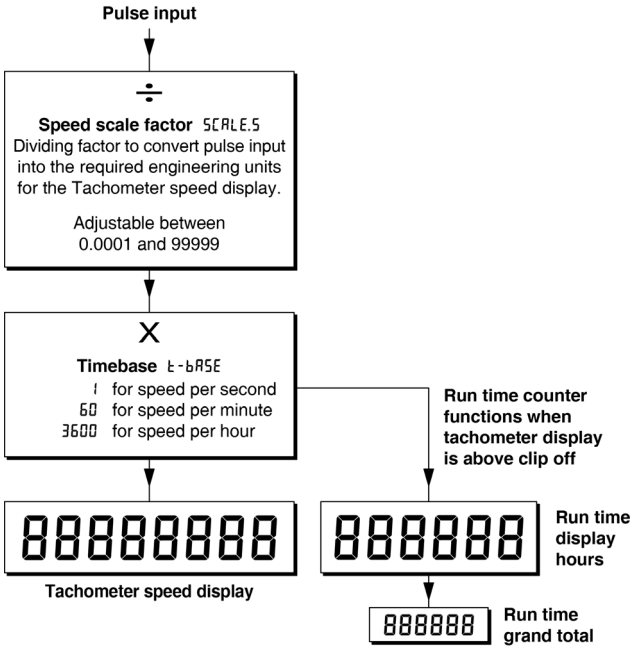

Fig 10 Calibration structure

6.2 Accessing configuration functions

Throughout this manual push buttons are shown as ▼, ▲, P and E. Legends displayed by the instruments are shown in a seven segment font as they appear on the Tachometers e.g. inPut and uPdAtE.

Access to the configuration menu is obtained by operating the P and E push buttons simultaneously. If the instrument is not protected by a security code the first parameter inPut will be displayed. If a security code other than the default code 0000 has already been entered, the instrument will display CodE. Press P to clear this prompt and enter the security code for the instrument using the ▼ or ▲ push button to adjust the flashing digit, and the P push button to transfer control to the next digit. If the correct code has been entered pressing E will cause the first parameter inPut to be displayed. If an incorrect code is entered, or a push button is not operated within ten seconds, the instrument will automatically return to the display mode.

All configuration functions and prompts are shown on the upper eight digit display.

Once within the configuration menu the required parameter can be selected by scrolling through the menu using the ▼ or ▲ push button. The configuration menu is shown diagrammatically in Fig 11.

When returning to the display mode following reconfiguration, the Tachometer will display dAtA followed by SAUE while the new information is stored in permanent memory.

6.3 Summary of configuration functions

This section summarises all the configuration functions. When read in conjunction with Fig 11 it provides a quick aid for configuring the Tachometer. If more detail is required, each section contains a reference to a full description of the function.

Display	Summary of function
inPut	**Input** Contains sub-menu with two functions: inP.tYPE — Select Input type dEbounCE — Set debounce **See section 6.4**
	inP.tYPE Configures the Tachometer to accept one of six types of input: oP.CoL — Open collector * VoLtS L — Voltage pulse <1 >3V VoLtS H — Voltage pulse <3 >10V Coi L — Magnetic pick-off Pr.dEt — Proximity detector * ContACt — Switch contact * * Link terminals 3 & 4 **See section 6.5**
	dEbounCE Defines level of input debounce applied to the pulse input to prevent false counting, three levels are selectable: dEFAuLt HEAVY LiGHt **See section 6.6**
uPdAtE	**Display update interval** Defines the interval between display updates from 0.5 to 5 seconds. **See section 6.7**
di SP-2	**Run-time display** Turns the lower display, which shows run-time in hours, on or oFF. **See section 6.8**

Display	Summary of function
dP	**Decimal points** Defines the position of the decimal point in the Tachometer speed display. **See section 6.9**
SCALE.S	**Speed scale factor** SCALE.S is a dividing factor, adjustable between 0.0001 and 99999, that converts the pulse input into the required Tachometer speed display.. e.g. If a sensor monitoring a rotating shaft generates 18 pulses per revolution, to produce a Tachometer speed display in revolutions SCALE.S should be set to 18.0. **See section 6.10**
t-bASE	**Timebase** Selectable multiplier allowing Tachometer speed display to be in units per second, per minute or per hour. Select: tb-01 — per second tb-60 — per minute tb-3600 — per hour **See section 6.11**
FiLtEr	**Display filter** Adjustable digital filter that reduces the noise on the Tachometer speed display, comprising two parameters each adjustable between 0 and 9. The first digit defines the amount of filtering applied to the display, the second the deviation from the displayed value at which the filter will be overridden and the Tachometer display will move rapidly to the new value. **See section 6.12**
CLP-oFF	**Clip-off** Clip-off is the Tachometer speed display threshold below which the run-time clock is inhibited. **See section 6.13**

Display	Summary of function
LoC CLr	**Local reset** Contains sub-menu with two functions enabling the run-time display and grand total run-time to be reset to zero via the front panel push buttons when the Tachometer is in the display mode. **See section 6.14** CLr tot When 'on' is selected, operating the ▼ and ▲ buttons simultaneously for more than three seconds in the display mode resets the run-time display to zero. **See section 6.15** CLr Gtot When on is selected, operating the E and ▲ buttons simultaneously for more than 10 seconds in the display mode resets the run-time grand total to zero. **See section 6.16**

Display	Summary of function
CLr Gtot	**Resets grand total run-time to zero.** This function resets the grand total run-time to zero from within the configuration menu when CLr YES is selected, and SurE is entered to confirm the instruction. **Note**: Once reset, the original grand total can not be recovered. **See section 6.17**
CodE	**Security code** Defines a four digit alphanumeric code that must be entered to gain access to the configuration menu. Default code 0000 disables the security function and allows unrestricted access to all configuration functions. **See section 6.18**
rSEt dEF	**Reset to factory defaults** Returns the Tachometer to the factory defaults shown in section 6.0 To prevent accidental use the request must be confirmed by entering SurE before the reset will be executed. **See section 6.19**

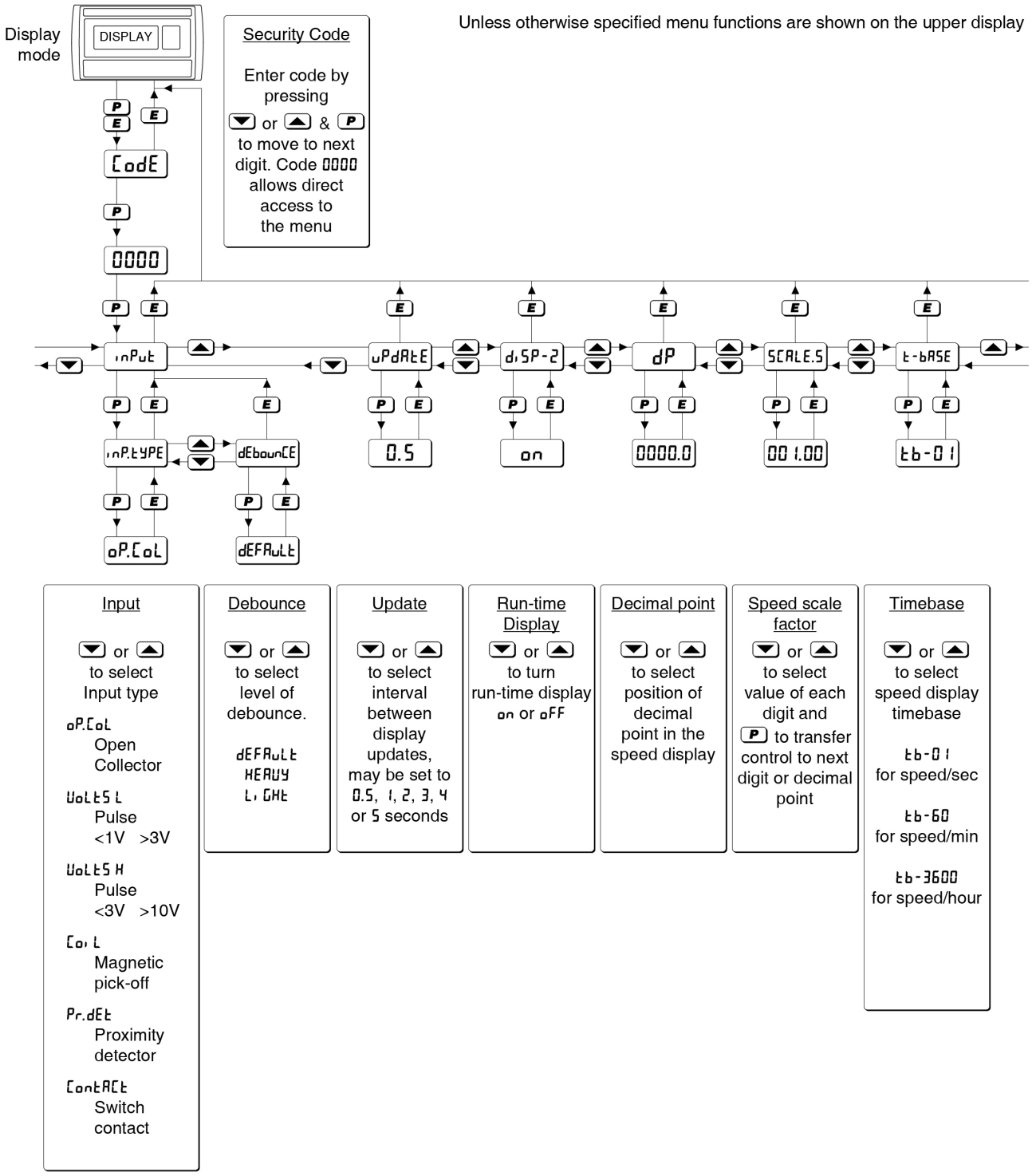

Fig 11 Configuration menu

When fitted optional alarms, pulse output and 4/20mA output functions appear here.

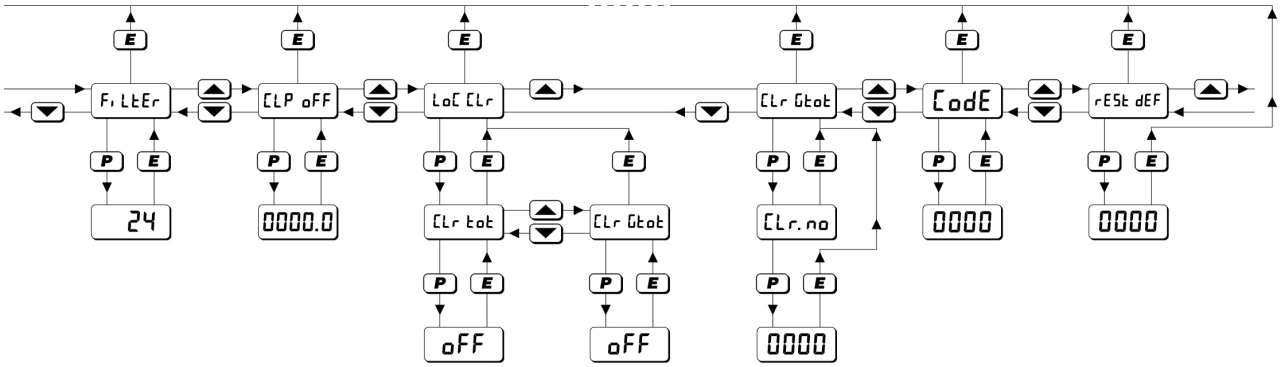

Filter	Clip off	Local run-time reset	Local run-time grand total reset	Reset run-time grand total	Define Security Code	Reset configuration to factory defaults
▼ or ▲ to adjust value of each digit and P to transfer control to other digit First digit: filter magnitude second digit: step response **Note:** While making adjustments the filtered rate display is shown on lower display so stability can be assured	Tachometer display below which run-time timer is inhibited ▼ or ▲ to adjust value and P to move to next digit	▼ or ▲ to turn the local run-time reset function on or oFF. When on, run-time display is reset to zero when ▼ and ▲ are operated simultaneously in display mode for more than 3 seconds	▼ or ▲ to turn the local grand total run-time reset function on or oFF. When on, grand total run-time may be reset to zero when E and ▲ are operated simultaneously in display mode for more than 10 seconds	Press ▼ or ▲ to select YES to reset grand total to zero Confirm instruction by entering SurE. Press ▼ or ▲ to adjust each digit and P to move to next digit	Enter by pressing ▼ or ▲ and P to move to next digit	Confirm instruction by entering SurE. Press ▼ or ▲ to adjust each digit and P to move to next digit

6.4 Input: inPut

The Input function contains two sub-functions inP.tYPE and dEbounCE which configure the Tachometer input and define the amount of input noise rejection.

6.5 Input type: inP.tYPE

inP.tYPE is a sub-menu in the inPut function which defines the type of input sensor or input pulse with which the Tachometer will function. To check or change the type of input, select inPut in the main configuration menu and press P which will reveal the inP.tYPE prompt, pressing P again will show the present type of input. If set as required press E twice to return to the configuration menu, or repeatedly press the ▼ or ▲ button until the required type of input is displayed and then press E twice to return to the configuration menu.

One of following six types of input may be selected:

		Switching thresholds Low	High
oP.CoL	Open collector [2]	2	10kΩ
VoLtSL	Voltage pulse low [1]	1	3V
VoLtSH	Voltage pulse high[1]	3	10V
Coil	Magnetic pick-off	0	40mV
Pr.dEt	Proximity detector [2]	1.2	2.1mA
ContACt	Switch contact [2]	100	1000Ω

Notes:

1 Maximum voltage input +30V.

2 For sensors that require energising i.e. proximity detectors, switch contacts and open collectors, terminals 3 & 4 of the Tachometer should be linked together.

3 To count correctly, the input pulse must fall below the lower switching threshold and rise above the higher switching threshold.

4 See section 6.6 for maximum operating frequency.

6.6 Debounce: dEbounCE

dEbounCE is an adjustable sub-menu in the inPut function which prevents the Tachometer miscounting when the input pulse has noisy edges, such as those resulting from a mechanical contact closing and bouncing. Three levels of protection may be selected and the amount of debounce applied depends upon the type of Tachometer input that has been selected in the inP.tYPE function.

The following table shows the minimum time that the input pulse must be continuously above the upper input switching threshold and continuously below the lower switching threshold to ensure that the Tachometer processes the input pulse. Input switching thresholds are shown in section 6.5.

De-bounce level	Min input pulse width	
	Type of Input	
	Contact	All others
Default	1600µs	40µs
Heavy	3200µs	350µs
Light	400µs	5µs

The Tachometer's maximum counting frequency depends upon the debounce level selected, the shape of the input pulse and its amplitude. The following table assumes a square wave input and is only for guidance. The maximum operating frequency will be lower if the input pulses have sloping edges and the pulse amplitude only slightly exceeds the input switching thresholds.

ONLY FOR GUIDANCE		
Debounce level	Max counting frequency	
	Type of input	
	Contact	All others
Default	250Hz	12kHz
Heavy	120Hz	2kHz
Light	1000Hz	100kHz

The minimum operating input frequency is 0.01Hz. Below this frequency the speed display will be forced to zero.

The dEbounCE function is a sub-menu located in the inPut function. Select inPut in the configuration menu and press P which will reveal the inP.tYPE prompt, press the ▼ or ▲ button to select dEbounCE followed by P to reveal the existing setting. Pressing the ▼ or ▲ button will scroll through the three levels. When the required level has been selected, pressing E twice will enter the selection and return the display to the inPut prompt in the configuration menu.

6.7 Display update interval: uPdAtE

If the Tachometer display is likely to change rapidly, a longer interval between display updates may simplify reading the display. This function allows one of six different display intervals between 0.5 and 5 seconds to be selected. The selected display update interval does not affect the update time of any other instrument function.

To adjust the update interval select uPdAtE from the configuration menu and press P to reveal the current time. Pressing the ▼ or ▲ button will scroll through the six times. When the required interval has been selected press E to enter the selection and return to the configuration menu.

6.8 Run-time display: di SP-2

This function turns the run-time display on or off, although the run-time timer continues to function when the display is off.

To check the status of the run-time display, select di SP-2 from the configuration menu and press P that will reveal if the run-time display is on or oFF. The setting may be changed by pressing the ▼ or ▲ button followed by the E button to enter the selection and return to the configuration menu.

6.9 Position of the decimal points: dP

This function positions the decimal point in the Tachometer speed display. To adjust select dP from the configuration menu and press P. The Tachometer display will be activated and identified by the display annunciator as RATE. The decimal point, which may be positioned between any of the digits or may be absent is positioned by operating the ▼ or ▲ push button. When set as required enter the setting and return to the configuration menu by operating the E button.

6.10 Speed scale factor: SCALE.S

SCALE.S is a dividing factor adjustable between 0.0001 and 99999 that enables the Tachometer speed display to be in the required engineering units. e.g. If a sensor monitoring a rotating shaft generates 18 pulses per revolution, to produce a Tachometer speed display in revolutions SCALE.S should be set to 18.0.

The units of the Tachometer speed display are pulses per unit of time. The unit of time is the timebase of the instrument which is determined by t-bASE which is described in section 6.11.

To check or change the speed scale factor select SCALE.S from the configuration menu and press P which will reveal the existing value with one digit flashing. The value of the flashing digit may be changed by pressing the ▼ or ▲ button.

When this digit has been adjusted as required, pressing P will transfer control to the next digit. When all the digits have been adjusted pressing P will transfer control to the decimal point which may be positioned between any of the digits, or may be omitted by moving it to the right of the least significant digit. When the required speed scale factor has been entered, press E to return to the SCALE.S prompt in the configuration menu.

6.11 Timebase: t-bASE

The timebase multiplies the Tachometer speed display by 1, 60 or 3,600 depending upon whether the Tachometer is required to display speed per second, per minute or per hour. e.g. RPS, RPM or RPH. See Fig 9.

To check or change the timebase, select t-bASE from the configuration menu and press P which will reveal the current setting. Pressing the ▼ or ▲ button will scroll through the three options:

tb-1	speed per second
tb-60	speed per minute
tb-3600	speed per hour

When the required multiplier is displayed press E to return to the t-bASE prompt in the configuration menu.

6.12 Display filter: FiLtEr

The digital display filter has two independent adjustable parameters enabling the Tachometer speed display response to be tailored for optimum performance. The filter parameters are controlled by a two digit number. The first digit defines the amount of filtering applied to the display as shown below.

First digit	Filter time constant seconds
0X	0
1X	1.3
2X	4.3
3X	6.5
4X	8.7
5X	11.3
6X	15.7
7X	20.9
8X	25.2
9X	31.5

The second digit defines the deviation from the displayed speed at which the filtering defined by the first digit will be overridden and the Tachometer speed display will move rapidly to the new value.

Second digit	Magnitude of input step change which will override the filter and move the speed display rapidly to the new value..
X0	Off
X1	1%
X2	2%
X3	4%
X4	8%
X5	12%
X6	16%
X7	24%
X8	32%
X9	64%

By careful adjustment of the two parameters a stable display with an acceptable input step response can be obtained for most applications.

During commissioning it is recommended that initially the second digit is set to 0 (off) and the first digit is adjusted to provide an acceptable Tachometer display stability. The second digit should then be increased until the selected step size is greater than the noise on the display, at which setting the Tachometer speed display will become stable. These will be the optimum filter parameters for acceptable Tachometer speed display stability and a fast response to a large speed change of the monitored machinery.

To check or change the filter select FILTER in the configuration menu and press P which will reveal the current settings with the first digit flashing. Pressing the ▼ or ▲ button will change the flashing digit and P will transfer control to the second digit. While making adjustments the filtered Tachometer display is shown on the lower display in place of run-time so that stability can be assessed while adjustments are being made. When set as required, press the E button to enter the revised parameters and return to the FILTER prompt in the configuration menu.

6.13 Clip-off: CLP oFF

Clip-off determines the displayed speed at which the run-time counter starts to function, below this threshold the run-time counter does not function. If the run-time counter is required to operate whenever the Tachometer is powered, clip-off should be set to zero.

If the run-time display is not being used it is not necessary to enter a clip-off value - see 6.8.

To check or change the clip-off threshold select CLP oFF from the configuration menu and press P which will reveal the current setting. The threshold is shown in the units already selected for the Tachometer speed display with one digit flashing. The value of the flashing digit may be adjusted by pressing the ▼ or ▲ button, when set as required pressing P will transfer control to the next digit. When all the digits have been adjusted, press the E button to enter the revised threshold and return to the CLP oFF prompt in the configuration menu.

When the Tachometer speed display falls below the clip-off threshold, the HOLD annunciator will be activated and the run-time clock will be stopped.

Note:

To avoid confusion, when the speed scale factor SCALE.S, timebase t-bASE, or the position of the speed display decimal point dP are changed, clip-off will automatically be reset to zero. A new clip-off threshold must be entered after any of these changes have been made.

6.14 Local reset: LoC CLr

The Local reset function contains two sub-functions CLr tot and CLr Gtot which when enabled allow the run-time display and grand total run-time to be reset to zero via the instrument push buttons while the Tachometer is in the display mode.

6.15 Local run-time reset: CLr tot

CLr tot is a sub-menu in the LoC CLr function which when activated allows an operator to reset the run-time display to zero while the Tachometer is in the display mode by operating the ▼ and ▲ push buttons simultaneously for more than three seconds.

Select LoC CLr in the configuration menu and press P which will reveal the CLr tot prompt, operate P again to show if the local run-time reset is on or oFF. If set as required operate the E button twice to return to the configuration menu, or the ▼ or ▲ button to change the setting followed by the E button twice to enter the change and return to the LoC CLr prompt in the configuration menu.

Note:

The run-time display may also be reset to zero remotely by connecting terminals RS1 and RS2 together for more than one second. See sections 3.6; 4.1.8 and 4.2.7 of this manual.

6.16 Local grand total run-time reset: CLr Gtot

The grand total run-time is a separate timer that functions in parallel with the run-time display, but is not zeroed when the run-time display is reset to zero. The run-time grand total may be viewed in the display mode by pressing the E and ▲ buttons simultaneously.

CLr Gtot is a sub-menu in the LoC CLr function which when activated allows an operator to reset the grand total run-time to zero while the Tachometer is in the display mode by operating the E and ▲ push buttons simultaneously for more than ten seconds. See section 2.2

To check or change the function select LoC CLr in the configuration menu and press P which will reveal the CLr tot prompt. Using the ▼ or ▲ button select CLr Gtot and press P which will show if the local grand total reset is on or oFF. If set as required operate the E button twice to return to the configuration menu, or the ▼ or ▲ button to change the setting followed by the E button twice to enter the change and return to the LoC CLr prompt in the configuration menu.

Note:

Once reset, the grand total run-time can not be recovered.

6.17 Grand total run-time reset from within the configuration menu: CLr Gtot

The grand total run-time is a separate timer that is incremented in parallel with the run-time display, but is not zeroed when the run-time display is reset to zero. The grand total may be viewed in the display mode by pressing the E and ▲ buttons simultaneously.

The grand total can be reset to zero from within the configuration menu using this CLr Gtot function.

To zero the grand total from within the configuration menu select CLr Gtot and press P which will cause the instrument to display CLr . no with no flashing. Press the ▼ or ▲ push button until CLr . YES is displayed and then press P which will result in a 0000 prompt being displayed with the first digit flashing. This is a request for the instruction to be confirmed by entering SurE using the ▼ or ▲ button to adjust the flashing digit and the P button to move control to the next digit. Pressing E will then reset the grand total to zero and return the Tachometer to the configuration menu.

Note:

Once reset, the grand total can not be recovered.

6.18 Security code: CodE

Access to the instrument's configuration menu may be protected by a four digit security code which must be entered to gain access. New instruments are configured with the default security code 0000 which allows unrestricted access to all configuration functions.

To enter a new security code select CodE from the configuration menu and press P which will cause the Tachometer to display 0000 with one digit flashing. The flashing digit may be adjusted using the ▼ or ▲ push button and the P button to transfer control to the next digit. When all the digits have been adjusted press E to return to the CodE prompt. The revised security code will be activated when the Tachometer is returned to the display mode.

Please contact BEKA associates sales department if the security code is lost.

6.19 Reset configuration to factory defaults: rSEt dEF

rSEt dEF resets the Tachometer configuration to the factory default configurations shown in sections 6.0.

To reset the Tachometer to the factory default configurations select rSEt dEF from the configuration menu and press P which will result in the instrument displaying 0000 with the first digit flashing. To confirm the instruction SurE should be entered. Using the ▼ or ▲ button set the first flashing digit to S and press P which will transfer control to the second digit which should be set to u. When SurE has been entered pressing the E button will reset all the configuration functions and return the instrument to the display mode.

7. CONFIGURATION EXAMPLE

In this example a BA317NE Tachometer is connected to a proximity detector producing 105 pulses per revolution.

The BA317NE is required to display rotational speed in RPM with a resolution of one RPM. The run-time clock is to operate when the shaft speed exceeds 5 RPM. The display is to be updated twice per second.

For this application the operator needs to reset the run-time display to zero from the display mode, but should not be able to reset the grand total run-time from the display mode. To prevent tampering the instrument configuration menu is to be protected by security code of 1209.

7.1 Configuration procedure

The BA317NE Tachometer may be configured on-site without disconnection from the power supply or from the proximity detector.

Step 1 Enter the configuration menu

Enter the configuration menu by simultaneously pressing P and E. Assuming a security code has not already been entered the instrument will respond by displaying inPut which is the first function in the configuration menu. See Fig 11.

Step 2 Select the type of input & debounce

With inPut displayed press P which will reveal the sub-menu. Using the ▼ or ▲ button select inP.tYPE and press P to reveal the current input. The Tachometer is required to work with a proximity detector so again using the ▼ or ▲ button select Pr. dEt followed by E to return to the inP.tYPE prompt in the sub-menu.

Using the ▼ or ▲ button select dEbounCE from the sub-menu and press P. Using the ▼ or ▲ button select dEFAuLt which will provide moderate pulse edge noise protection. If the Tachometer is subsequently found to miscount the noise rejection can be increased. Enter the selection and return to the inPut prompt in the configuration menu by pressing the E button twice.

See 6.4, 6.5 and 6.6

Step 3 Select the interval between display updates

Using the ▼ or ▲ button select uPdAtE in the configuration menu and press P to reveal how frequently the Tachometer display is updated.

Using the ▼ or ▲ push button select 0.5 (0.5 seconds i.e. 2 display updates per second). Enter the selection and return to the uPdAtE prompt in the configuration menu by pressing the E button.

See 6.7

Step 4 Run-time display

Using the ▼ or ▲ button select di SP-2 in the configuration menu and press P to select if the run-time display is on or oFF. The Tachometer is required to display run-time therefore using the ▼ or ▲ button select on and press E to enter the selection and return to the di SP-2 prompt in the configuration menu.

See 6.8

Step 5 Position of decimal point in speed display.

Select dP from the configuration menu and press P. The speed display will be activated and identified by the RATE annunciator. Using the ▼ or ▲ push button position the decimal point to the right of the least significant digit to give a total display resolution of 1.

Finally press the E button to enter the selection and return to the dP prompt in the configuration menu.

See 6.9

Step 6 Enter the speed scale factor

SCALE.S is a dividing factor adjustable between 0.0001 and 99999 that enables the Tachometer to display speed in the required engineering units. The speed display timebase is determined by t-bASE that is adjusted in Step 7.

In this example the Tachometer speed display is required in revolutions per minute. The proximity detector produces 105 pulses per revolution therefore SCALE.S should therefore be adjusted to 105.0.

Using the ▼ or ▲ push button select SCALE.S from the configuration menu and press P to reveal the existing value with one digit flashing. This should be changed to 105.0 using the ▼ or ▲ push button to adjust the flashing digit and the P button to transfer control to the next digit and to position the decimal point. Finally, enter the new value and return to the SCALE.S prompt in the configuration menu by pressing E.

See 6.10

Step 7 Enter the speed timebase

The speed timebase determines if the Tachometer displays speed per second, per minute or per hour. In this example revolutions per minute are required.
Using the ▼ or ▲ push button select t-bASE from the configuration menu and press P. Again using the ▼ or ▲ push button select tb-60 from the three options which will multiply the speed display by 60. Enter the selection and return to the t-bASE prompt in the configuration menu by pressing E.
See 6.11

Step 8 Adjust the display filter

The digital display filter has two independent adjustable parameters enabling the rate display response to be tailored for optimum performance. The filter parameters are controlled by a two digit number. The first digit defines the amount of filtering applied to the display, for initial configuration it is recommended it is set to 2 which is a time constant of 4.3 seconds.
The second digit defines the deviation from the displayed speed at which the filtering, defined by the first digit, will be overridden and the Tachometer speed display will move rapidly to the new value. It is recommended that the second digit is initially set to 0.

After configuration both parameters may require further adjustment to provide a stable display with an acceptable step response.

To allow the effect of filter changes to be seen immediately, the live speed display is shown on the lower display in place of run-time while the filter parameters are shown and being adjusted on the upper display.

Using the ▼ or ▲ push button select FiLtEr from the configuration menu and press P. The first digit, which controls the filter time constant, will be flashing and should be set to 2 using the ▼ or ▲ push buttons. The P button will transfer control to the second digit, which controls the step response and should be set to 0 in the same way. Finally, enter the selection and return to the FiLtEr prompt in the configuration menu by pressing E.
See 6.12

Step 9 Define clip-off

In this example the run-time clock is required to operate when the display speed equals or exceeds 5 RPM. The clip-off threshold should therefore be set to 5.

Using the ▼ or ▲ push button select CLP oFF from the configuration menu. Press P which will reveal the current clip-off threshold in RPM i.e. the same units already selected for the speed display. Adjust the display to 00005 using the ▼ or ▲ push buttons to adjust the flashing digit and the P button to transfer control to the next digit. Finally, enter the new clip-off threshold and return to the CLP-oFF prompt in the configuration menu by pressing E.
See 6.13

Step 13 Local reset of total and grand total

Two separate functions in the LoC CLr sub-menu may be individually activated to allow the operator to reset the run-time display and grand total run-time from the display mode without entering the configuration menu.

In this example the operator is required to reset the run-time display but not the grand total run-time when the BA317NE Tachometer is in the display mode.
Using the ▼ or ▲ button select LoC CLr in the configuration menu and press P which will reveal the sub-menu. Again using the ▼ or ▲ button select the local total reset function CLr tot and press P. This is required therefore using the ▼ or ▲ button select on followed by E to return to the CLr tot prompt in the sub-menu.

Using the ▼ or ▲ button select the local grand total run-time reset function CLr Gtot and press P. This is not required therefore using the ▼ or ▲ button select oFF. Enter the selection and return to the LoC CLr prompt in the configuration menu by pressing the E button twice.
See 6.15 and 6.16

Step 14 Reset the grand total to zero

Before completing configuration the run-time grand total should be reset to zero. Using the ▼ or ▲ button select CLr.Gtot in the configuration menu and press P which will cause CLr.no to be displayed. Again using the ▼ or ▲ button select CLr YES and press P which will result in a 0000 display with one digit flashing. This is a request for the instruction to be confirmed by entering SurE using the ▼ or ▲ buttons to set each digit and the P button to move control to the next digit. Pressing E will then reset the run-time grand total to zero and return the instrument to the CLr.Gtot prompt in the configuration menu.
See 6.17.

Step 15 Define the security code

Defining a security code prevents unauthorised access to the configuration menu. Using the ▼ or ▲ button select CodE from the configuration menu and press P which will reveal 0000 with the first digit flashing. This example requires the security code to be 1209, using the ▼ or ▲ button set the flashing digit to 1 and press P to transfer control to the second digit. When all have been entered press E to return to the main configuration menu.
See 6.18.

Step 16 Return to the display mode

Configuration of the BA317NE is now complete. Pressing the E button will save the new configuration and return the Tachometer to the display mode. The BA317NE will display dAtA followed by SAVE while the new information is stored in permanent memory, which will be protected from unauthorised adjustment by the security code.

To obtain a stable display it may be necessary to adjust the two filter parameters and the level of debounce during commissioning of the Tachometer.

8. MAINTENANCE

8.1 Fault finding during commissioning

If a BA317NE fails to function during commissioning the following procedure should be followed:

Symptom	Cause	Check:
No display	No power supply, or incorrect wiring. Note: Terminals 2, 6 & RS2 are interconnected within the instrument.	That there is between 10 and 30V on terminals 1 & 2 with terminal 1 positive.
Tachometer is receiving power but pulse input indicator is not rotating	No input pulses, incorrect input configuration, incorrect linking of terminals 3 & 4	Input configuration. Linking of terminals 3 & 4. That input signal polarity is correct.
Pulse input indicator rotating but incorrect speed display	Incorrect speed display calibration	SCALE.S t-bASE
Pulse input indicator rotating but incorrect run-time display	Incorrect timebase or clipoff. Remote reset switch contacts closed	SCALE.t CL,P-oFF That RESET annunciator is not activated. If it is, check reset wiring and switch.
Unstable speed display	Noisy pulse input signal	Eliminate source of electrical noise. Increase debounce and/or display filter. Increase display update interval uPdAtE
Unable to enter configuration menu.	Incorrect security code	That the correct security code is being used. Contact BEKA if code is lost.
Clip-off does not function	Clip-off has automatically reset to zero following change of speed display calibration.	Reconfigure CL,P oFF
Alarms do not function	Alarms have been disabled following calibration change	Re-enable both alarms.

8.2 Fault finding after commissioning

BS EN 60079-17 *Electrical installations inspection and maintenance* permits live maintenance in Zone 2 if a risk analysis demonstrates that this does not introduce an unacceptable risk. The removal of covers [opening of Ex n enclosure] is permitted if this can be done without contaminating the interior of the instrument with dust or moisture. Some end-users may prefer not to permit live maintenance to minimise risk.

ENSURE PLANT SAFETY BEFORE STARTING MAINTENANCE

Live maintenance within the hazardous area should only be performed when it is permitted by risk analysis, or when there is no risk of a flammable atmosphere being present.

If a BA317NE fails after it has been functioning correctly, the following table may help to identify the cause of the failure.

Symptom	Cause	Check:
No display	No power supply.	That there is between 10 and 30V on terminals 1 & 2
Pulse input indicator not rotating	No input pulses	Output from speed sensor. Wiring between sensor and Tachometer.
Pulse input indicator rotating, speed display is zero and . HOLD annunciator is not activated.	Input below clip-off threshold.	CL,P oFF threshold and if necessary adjust.
Unstable speed display	Noisy pulse input signal	Eliminate source of electrical noise. Increase debounce and/or display filter. Increase display update interval uPdAtE

If this procedure does not reveal the cause of the fault, it is recommended that the instrument is replaced.

8.3 Servicing

We recommend that faulty BA317NE Tachometers are returned to BEKA associates or to our local agent for repair.

8.4 Routine maintenance

The mechanical and electrical condition of the instrument should be regularly checked. Initially annual inspections are recommended, but the inspection frequency should be adjusted to suit the environmental conditions.

8.5 Guarantee

Instruments which fail within the guarantee period should be returned to BEKA associates or our local agent. It is helpful if a brief description of the fault symptoms is provided.

8.6 Customer comments

BEKA associates is always pleased to receive comments from customers about our products and services. All communications are acknowledged and whenever possible, suggestions are implemented.

9. ACCESSORIES

Accessories for the BA317NE Tachometer are shown below, all except the scale card are factory fitted and should be specified when the instrument is ordered:

Scale card

Tag number

Backlight [1]

Isolated pulse output [2]
or
Isolated 4/20mA output [2]
or
Isolated dual alarms [2]

Notes:

1. Internally powered
2. Only one of the three output options can be fitted to a BA317NE Tachometer.

9.1 Scale card

The BA317NE has a window on the right hand side of the display through which a scale card showing the units of measurement such as RPM can be viewed. New Tachometers are fitted with a scale card showing the units of measurement specified when the instrument was ordered, if the units are not specified a blank scale card will be fitted. A pack of scale cards pre-printed with common units of measurement is available as an accessory. These can easily be fitted on-site to the Tachometer without opening the instrument enclosure or removing it from the panel, See section 5.5 of this instruction manual.

Custom scale cards for applications requiring less common units of measurement are also available.

9.2 Tag information

The BA317NE can be supplied with a tag number or application information laser etched onto the rear panel adjacent to the terminals. This information is not visible from the front of the instrument after installation.

9.3 Display backlight

The BA317NE Tachometer can be supplied with a factory fitted backlight that produce green illumination enhancing display contrast and enabling the display to be read at night and in poor lightng conditions. The optional backlight is internally powered from the instrument power supply so that no additional wiring is required, but the supply current increases as shown below:

Without backlight		10.0mA
Addition for backlight	22.5mA	
Addition with terminals 3 & 4 linked	6.0mA	
Total current	38.5mA	

9.4 Alarms

The BA317NE can be supplied with factory fitted dual, solid state, single pole alarm outputs that may be independently configured as high or low, speed or run-time alarms with normally open or normally closed outputs.

Note: Only one of the three output options can be fitted.

Configurable functions for each alarm include adjustable setpoint, alarm delay time and alarm silence time. Hysteresis may be applied to speed alarms.

CAUTION

Alarm outputs should not be used for critical safety applications such as a shut down system.

When the BA317NE Tachometer power supply is turned off or disconnected, the alarm outputs will open irrespective of whether normally open or normally closed outputs have been selected. When designing a system an open output should therefore be chosen for the alarm condition.

Alarm annunciators on the instrument display indicate the status of each alarm. If an alarm delay or silence time has been selected the annunciator will flash during the delay or silence period.

The BA317NE internal counters are up-dated and compared with the alarm setpoint twice per second, irrespective of the display update time selected. This may result in an alarm being delayed for up to half a second after the speed or run-time has exceeded the setpoint.

9.4.1 Solid state output

Each alarm has a galvanically isolated single pole solid state switch output as shown in Fig 12. The outputs are polarised and current will only flow in one direction. Terminals A1 and A3 should be connected to the positive side of the supply.

Ron = less than 5Ω + 0.7V
Roff = greater than 1MΩ

Note: Because of the series protection diode some test meters may not detect a closed alarm output.

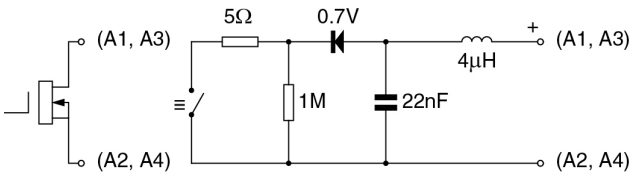

Fig 12 Equivalent circuit of each alarm output

9.4.2 Type nA certification

Each alarm output is a separate galvanically isolated Ex nA circuit with the following input parameters:

Ui = 30V dc
Ii = 200mA

This allows each alarm output to switch any dc circuit providing that in normal operation the maximum supply voltage is not greater than 30V dc and the switched current is not greater than 200mA.

Providing that the BA317NE Tachometer is correctly installed in a panel enclosure located in Zone 2 complying with the requirements for Ex n protection, the two alarm outputs may be used to switch suitably protected equipment located in Zone 1 or 2 of a hazardous area, or equipment located in a safe area.

Fig 13 shows a typical application in which a BA317NE Tachometer mounted in an Ex n panel enclosure located in Zone 2 is displaying the output from a Flameproof Ex d sensor located in Zone 1. Alarm 1 is switching an Ex e sounder in Zone 1 and alarm 2 is switching a sounder located in the safe area.

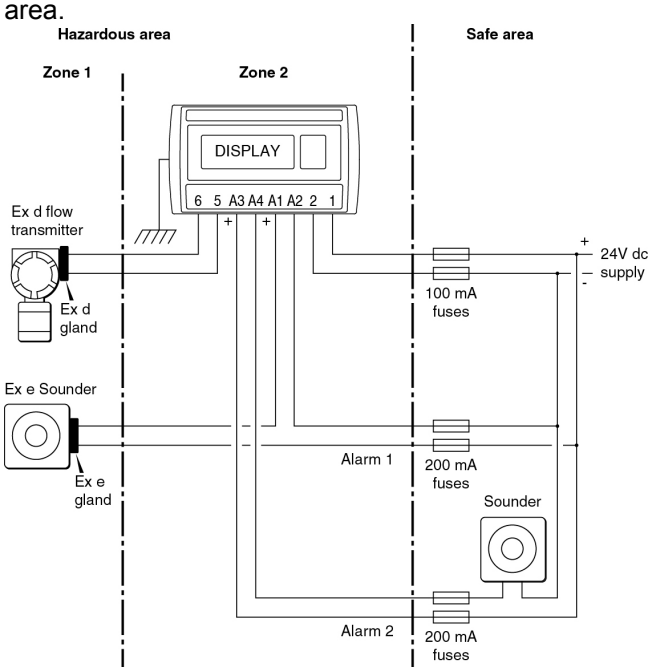

Fig 13 Typical alarm application
(Shown without recommended screened cables)

To comply with the requirements of EN 60079-14 *Electrical installations design, selection and erection*, each of the wires entering the hazardous area should be individually fused and contain a means of isolation. These two requirements are frequently satisfied by using fused terminals from which the fuses can be easily removed to achieve isolation. This is a satisfactory method at the low voltages and currents common in instrumentation systems.

Clear identification of, and easy access to the means of isolation is essential for their effective use. It is also necessary to ensure that the maintenance procedure makes sure that unauthorised re-closure of the switches does not occur. It is not considered necessary to have a means of isolation or electrical protection for the screen. Fig 2 illustrates an example of this type of fused terminal block.

For some application Ex nA instrumentation energised by a current limited power supply or instrument that can be switched off, is often considered adequate and to comply with the requirements of the standard.

9.4.3 Configuration and adjustment

When a BA317NE is supplied with alarms the configuration menu is extended as shown in Fig 14 which for simplicity only shows alarm AL1 configured to operate as a speed alarm. The run-time options are identical except that a run-time alarm can not have hysteresis. Alarm AL2 functions are identical to alarm AL1.

The following table summarises each of the alarm configuration functions and includes a cross references to more detailed information. Again only the functions on alarm AL1 are listed.

Display	Summary of function
EnbL	**Alarm enable** Enables or disables the alarm without changing the alarm parameters. See section 9.4.4
tYPE	**Type of alarm** Defines whether the alarm operates on the speed or run-time display. See section 9.4.5
SP 1SPEEd or SP 1Hour5	**Alarm setpoint 1** Adjusts the alarm setpoint. The alarm is activated when the speed or run-time display equals the setpoint. **Note:** SP 1S is displayed for a speed alarm and SP 1H for a run-time alarm. See section 9.4.6
Hi.Lo	**Alarm function** Defines whether the alarm has a high or low function. See section 9.4.7
no.nC	**Normally open or normally closed output.** Determines whether the single pole alarm output is open or closed in the non-alarm condition. See section 9.4.8

Display	Summary of function
HSEr	**Hysteresis** Adjusts the alarm hysteresis. Only available on a speed alarm. See section 9.4.9
dELA	**Alarm delay time** Adjusts the delay between the display equalling the setpoint and the alarm output being activated. See section 9.4.10
SiL	**Alarm silence time** Defines the time that the alarm output remains in the non-alarm condition following acceptance of an alarm. See section 9.4.11
FLSH	**Flash display when alarm occurs** When enabled, alternates the speed or run-time display between the value and alarm reference AL1 or AL2 when an alarm output is activated. See section 9.4.12
ACSP	**Access setpoint** Sub-menu that enables direct access to the alarm setpoints from the display mode and defines a separate security code. See section 9.4.13

9.4.4 Alarm enable: EnbL

This function allows the alarm to be enabled or disabled without altering any of the alarm parameters. Using the ▼ or ▲ push button select AL1 or AL2 from the configuration menu and press P to access the alarm sub-menu. Press the ▼ or ▲ button until EnbL is displayed followed by P which will reveal if the function is on or oFF. The setting can be changed by pressing the ▼ or ▲ push button followed by the E button to return to the alarm sub-menu.

9.4.5 Type of alarm: tYPE

Alarm 1 and Alarm 2 are totally independent, both may be speed or run-time alarms, or one may be conditioned for speed and the other for run-time.
Using the ▼ or ▲ push button select tYPE from the selected alarm sub-menu and press P to check or change the function. The ▼ or ▲ push button will toggle the selection between SPEEd and HourS, when set as required press the E button to return to the alarm sub-menu.

Note: When tYPE is changed, the alarm configuration is automatically reset to the default values and the alarm is disabled. It must therefore be reconfigured before use.

9.4.6 Setpoint adjustment: SP1x & SP2x

The speed alarm setpoints SP1SPEEd and SP2SPEEd may be positioned anywhere between 0000000 and 9999999, and the run-time alarm setpoint SP1HourS and SP2HourS anywhere between 00000 and 99999 hours.

All the setpoints are adjusted in the same way, for example, to adjust the setpoint of Alarm 1 which has been configured to operate on the speed display. Using the ▼ or ▲ push button select SP1SPEEd in the AL1 sub-menu and press P which will reveal the existing setpoint with one digit flashing. The required setpoint can be entered using the ▼ or ▲ push button to adjust the flashing digit and the P button to transfer control to the next digit. When set as required press E to enter the value and return to the SP1SPEEd prompt in the alarm 1 sub-menu.

9.4.7 Alarm function: Hi.Lo

Alarm 1 and Alarm 2 are totally independent, both may be Hi or Lo, or one may be conditioned as a Hi alarm and the other as a Lo alarm.
Using the ▼ or ▲ push button select Hi.Lo from the selected alarm sub-menu and press P to check or change the function. The ▼ or ▲ push button will toggle the alarm function between Hi and Lo, when set as required, press the E button to return to the Hi.Lo' prompt in the alarm sub-menu.

9.4.8 Alarm output status: no.nC

Each single pole alarm output may be open or closed in the non-alarm condition. When the BA317NE power supply is turned off or disconnected, the alarm output(s) will open irrespective of whether normally open or normally closed outputs have been selected. Therefore, when designing an alarm system normally closed nC should be selected so that the output opens when an alarm occurs or if the power supply fails.

Using the ▼ or ▲ push button select no.nC from the selected alarm sub-menu and press P to check or change the function. The ▼ or ▲ push button will toggle the contact status between no and nC, when set as required, press the E button to return to the no.nC prompt in the alarm sub-menu.

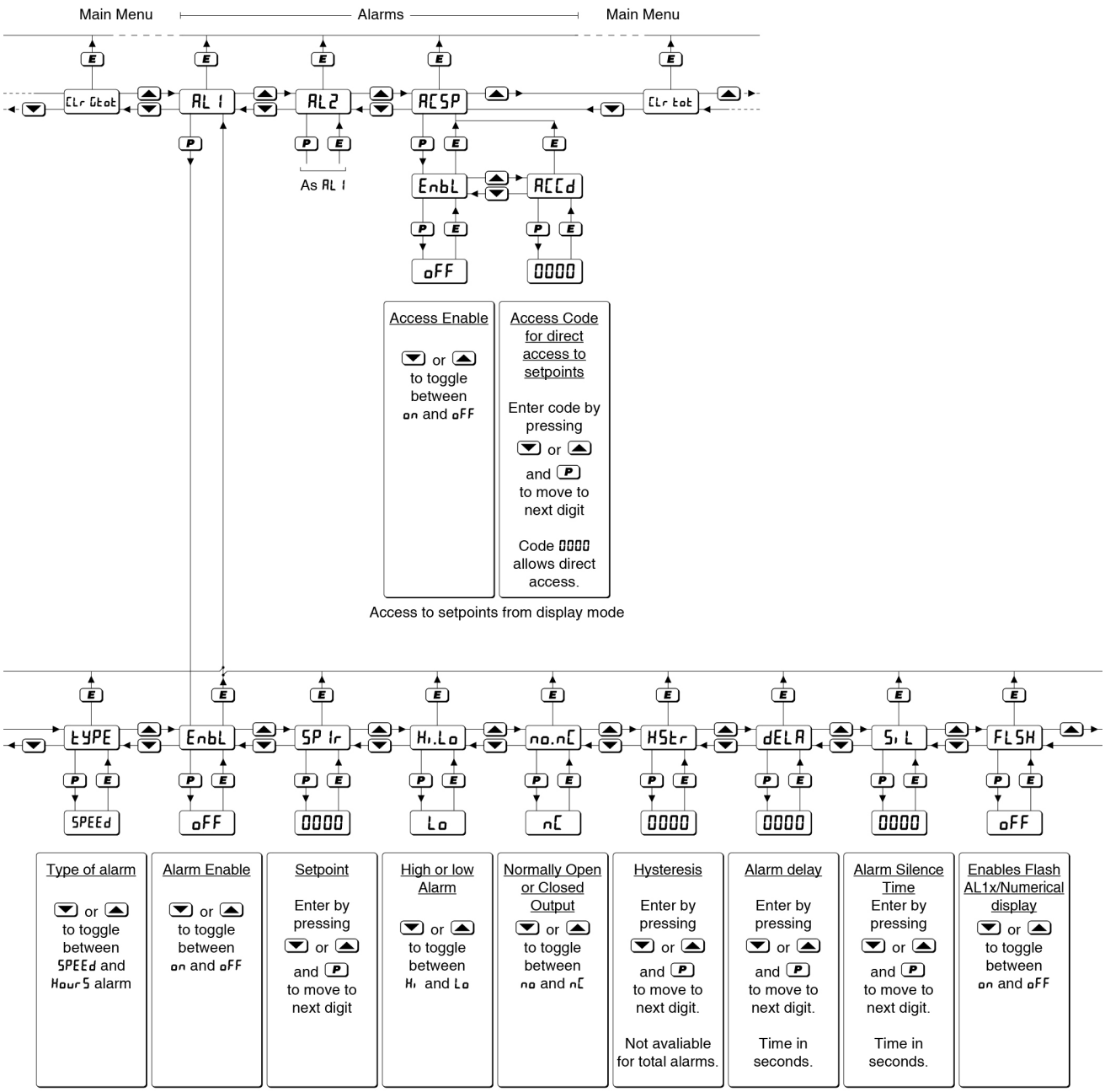

Fig 14 Alarm menu structure

9.4.9 Hysteresis: HStr

Hysteresis is only available on speed alarms so the HStr function only appears in the configuration sub-menu when alarm tYPE has been set to SPEEd. During configuration hysteresis is shown in the units of SPEEd previously configured for the Tachometer display.

Using the ▼ or ▲ push button select HStr in the selected alarm sub-menu and press P which will reveal the existing hysteresis with one digit flashing. The required hysteresis can be entered using the ▼ or ▲ push button to adjust the flashing digit and the P button to transfer control to the next digit. When set as required press E to enter the value and return to the HStr prompt in the alarm sub-menu.

e.g. A Tachometer configured to display a rotational speed of 0 to 500 RPM, with a high alarm set at 400 RPM and hysteresis of 10 RPM will perform as follows:

> The high alarm will be activated when speed equals or exceeds 400 RPM, but will not reset until the speed falls below 390 RPM.

9.4.10 Alarm delay: dELA

This function enables activation of the alarm output to be delayed for a fixed time following the alarm condition occurring. The delay can be set in 1 second increments up to 3600 seconds. If a delay is not required zero should be entered.

To adjust the delay select dELA using the ▼ or ▲ push button in the selected alarm sub-menu and press P which will reveal the existing delay time in seconds with one digit flashing. The required delay time can be entered using the ▼ or ▲ push button to adjust the flashing digit and the P button to transfer control to the next digit. When set as required press E to enter the value and return to the dELA prompt in the alarm sub-menu. The alarm annunciator will start flashing immediately an alarm condition occurs and will continue for the delay time, after which the alarm output will be activated and the alarm annunciator will be permanently activated.

9.4.11 Alarm silence time: SiL

The alarm silence function is primarily intended for use in small installations where the alarm output directly operates an annunciator such as a sounder. When the alarm silence time is set to any figure other than zero, the P push button becomes an alarm accept button.

After an alarm has occurred, operating the P button will cause the alarm output to revert to the non-alarm condition for the configured alarm silence time. When an alarm is silenced the alarm annunciator will flash until the silence time expires.

To adjust the alarm silence time select SiL using the ▼ or ▲ push button in the selected alarm sub-menu and press P which will reveal the existing alarm silence time in seconds with one digit flashing. The required delay time can be entered using the ▼ or ▲ push button to adjust the flashing digit and the P button to transfer control to the next digit. When set as required press E to enter the value and return to the SiL prompt in the alarm sub-menu.

9.4.12 Flash display when alarm occurs: FLSH

In addition to the two alarm annunciators at the bottom left hand side of the Tachometer display which show the status of both alarms, this function provides an even more conspicuous indication that an alarm condition has occurred.

When enabled, this function alternates the speed or run-time display between the numerical value and the alarm identification AL1 or AL2 when an alarm occurs.

Using the ▼ or ▲ push button select FLSH from the selected alarm sub-menu and press P to check or change the function. The ▼ or ▲ push button will toggle the function between oFF and on, when set as required, press the E button to return to the FLSH prompt in the alarm sub-menu.

9.4.13 Access Setpoint: ACSP

This function activates a separate menu that provides direct access to the alarm setpoints when the Tachometer is in the display mode by simultaneously operating the P and ▲ buttons. An operator can therefore adjust the alarm setpoints without having access to the configuration and alarm sub-menus. Protection against unauthorised or accidental adjustment is provided by a separate security access code.

Using the ▼ or ▲ push button select ACSP from the configuration menu and press P to reach the enable function EnbL. Pressing P will reveal the existing setting which can be toggled between on and oFF by pressing the ▼ or ▲ push button. When set as required, press the E button to return to the EnbL prompt from which a separate security access code can be entered using the ACCd function which can be selected using the ▼ or ▲ push button.

To enter a new security code select ACCd from the sub-menu and press P which will cause the Tachometer to display 0000 with one digit flashing. The flashing digit may be adjusted using the ▼ and ▲ push button, when set as required operating the P button will transfer control to the next digit. When all the digits have been adjusted press E to return to the ACCd prompt.

The revised security code will be activated when the Tachometer is returned to the display mode. Default security access code 0000 will disable the security code allowing direct access to the setpoints in the display mode by pressing the P and ▲ buttons simultaneously.

Please contact BEKA associates sales department if the security code is lost.

9.4.14 Adjusting alarm setpoints from the display mode

Access to the two alarm setpoints from the Tachometer display mode is obtained by operating the P and ▲ push buttons simultaneously as shown in Fig 15. If the setpoints are not protected by a security code the alarm setpoint prompt SP 1SPEEd or SP 1HourS will be displayed depending upon whether a speed or run-time alarm has been configured. If the setpoints are protected by a security code, CodE will be displayed first. Pressing P again will allow the alarm setpoint security access code to be entered digit by digit using the ▼ or ▲ buttons to adjust the flashing digit and the P push button to move control to the next digit. If the correct code is entered pressing E will then cause alarm setpoint prompt SP 1SPEEd or SP 1HourS to be displayed. If an incorrect security code is entered, or a button is not pressed within ten seconds, the instrument will automatically return to the display mode.

Once within the menu pressing the ▼ or ▲ buttons will toggle the display between the two alarm setpoint prompts SP 1x and SP2x.

To adjust an alarm setpoint select SP 1x or SP2x and press P which will reveal the current setting. The flashing digit of the setpoint may be adjusted using the ▼ or ▲ push button and the P button to transfer control to the next digit. When the required setpoint has been entered, pressing E will return the display to the SP 1x or SP2x prompt from which the other setpoint may be selected, or the instrument may be returned to the display mode by pressing E again.

Note: Direct access to the alarm setpoints is only available when the menu is enabled - see section 9.4.13

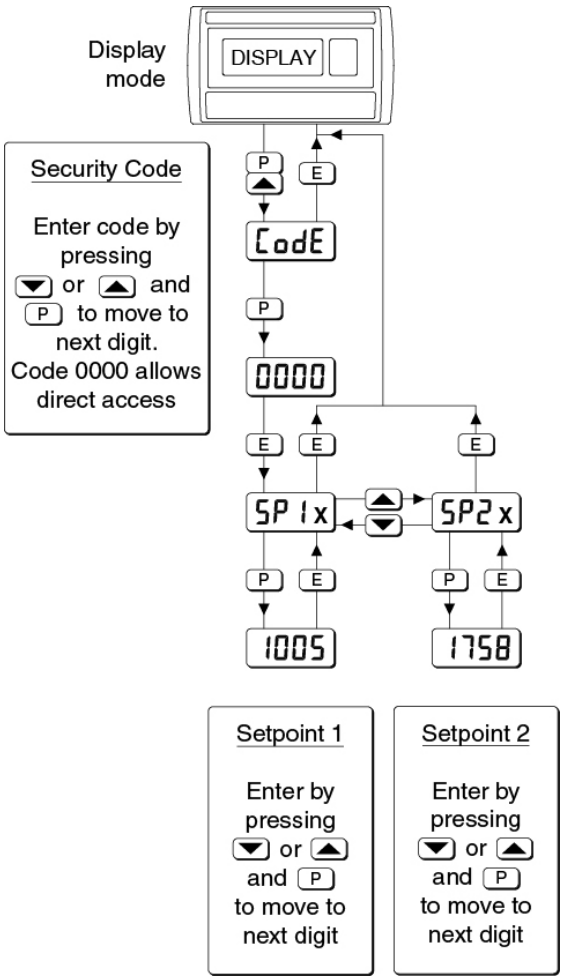

Fig 15 Setpoint adjustment from the display mode

9.5 Pulse output

The BA317NE can be supplied with a factory fitted isolated pulse output for retransmitting pulses to other instruments.

Note: Only one of the three output options can be fitted to a BA317NE Tachometer.

The pulse output is an open collector with the following parameters:

Ron	=	60Ω + 3V
Roff	=	1M
I max	=	10mA

To retransmit a pulse to another BA317NE Tachometer or to a BEKA counter, the pulse output terminals may be directly connected to the input terminals of the second instrument as shown in Fig 16, alternatively the second instrument may be located in the safe area. The second Tachometer should be configured for an open collector input.

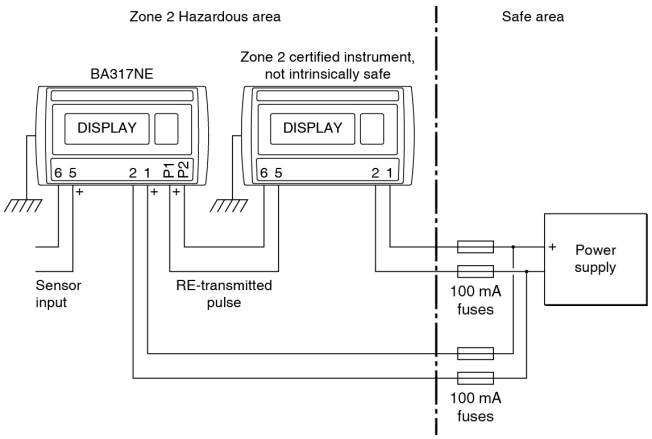

Fig 16 Pulse retransmission to another BEKA 'E' Ex nA instrument.

A voltage output pulse can be generated as shown in Fig 17. The current flowing in the pulse output circuit, which is defined by resistor R1, should be less than 10mA. With a 24V supply R1 should therefore be 2,200Ω or greater.

The output pulse may be a synchronous duplicate of the input pulse for re-transmission applications, or the frequency may be divided and the pulse width defined.

The retransmitted RTx annunciator on the instrument display shows the status of the retransmitted pulse output. Annunciator activation depends upon the setting of SourCE in the pulse output configuration menu.

SCALEd
Annunciator activated each time pulse output open collector is *on*, i.e. Ron is less than 60Ω + 3V.

diREct:
Annunciator continuously activated

9.5.1 Ex nA certification

The optional pulse output is a separate opto-isolated Ex nA circuit with the following input parameters:

Ui	=	30V dc
Ii	=	100mA

This allows the pulse output to be connected to any dc circuit providing that in normal operation the maximum supply voltage is not greater than 30V dc.

Providing that the BA317NE Tachometer is correctly installed in a panel enclosure located in Zone 2 complying with the requirements for Ex n protection, the pulse output may be used to transmit a pulse to any suitably protected equipment, except intrinsically safe equipment, located in Zone 1 or 2 of a hazardous area, or to equipment located in a safe area.

Fig 17 shows a BA317NE Tachometer mounted in an Ex n panel enclosure located in Zone 2 retransmitting a pulse to the safe area. The current pulse flows through R1 resulting in a voltage pulse output with an amplitude of about 20V.

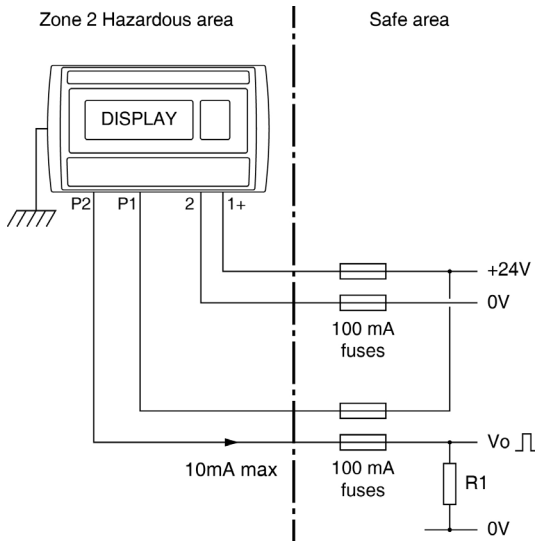

Fig 17 Generating voltage pulse in safe area

To comply with the requirements of EN 60079-14 *Electrical installations design, selection and erection*, each of the wires entering the hazardous area should be individually fused and contain a means of isolation. These two requirements may be satisfied by installing DIN rail mounted terminals incorporating a fuse which can easily be removed as shown in Fig 2 to provide isolation. Clear identification of, and easy access to the means of isolation is essential for their effective use. It is also necessary to ensure that the maintenance procedure makes sure that unauthorised re-closure of the switches does not occur. It is not considered necessary to have a means of isolation or electrical protection for cable screens.

For some application Ex nA instrumentation energised by a current limited power supply or instrument that can be switched off, is often considered adequate and to comply with the requirements of the standard.

9.5.2 Pulse output configuration: PuLSE oP

When the BA317NE Tachometer is supplied with a factory fitted pulse output the configuration menu is extended as shown in Fig 18 to include the pulse output sub-menu PuLSE.oP.

The pulse output sub-menu allows the source of the output pulse to be selected in the SourCE sub-function. For re-transmission applications the output pulse may be a synchronous duplicate of the input pulse by selecting diréCt in the SourCE sub-function. When SCALEd is selected, two additional functions, diVidE and durAtion are introduced enabling the input pulse frequency to be divided to produce the output pulse frequency, and the output pulse width (duration) to be lengthened.

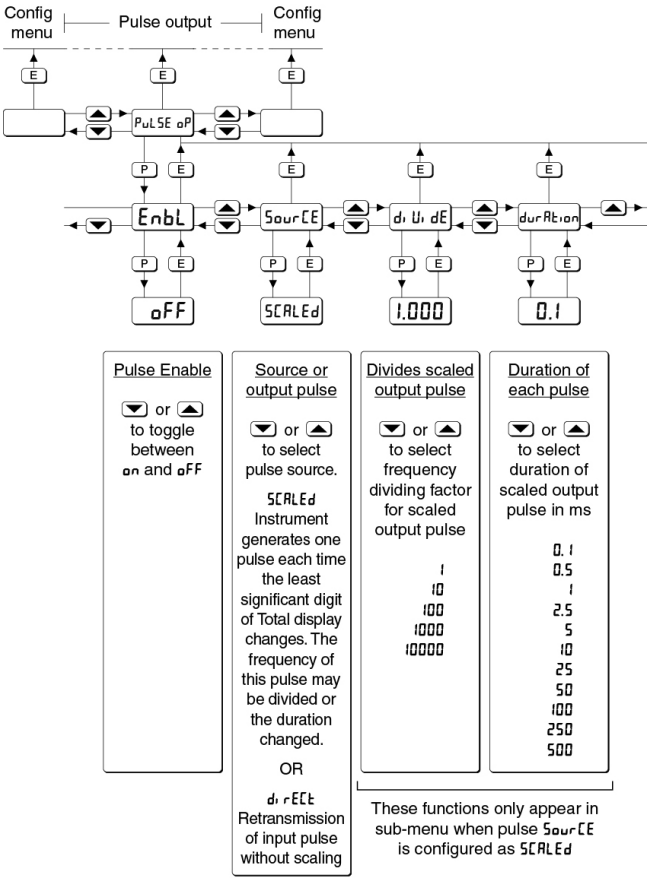

Fig 18 Pulse output configuration sub-menu

9.5.3 Enable pulse output: EnbL

This function allows the pulse output to be disabled or enabled without altering any of the pulse output parameters. Using the ▼ or ▲ push button select EnbL in the pulse output sub-menu and press P to reveal the existing setting on or oFF. The function can be changed by pressing the ▼ or ▲ push button followed by the E button to return to EnbL.

9.5.4 Source of pulse output: SourCE

The output pulse may be derived from:

diREct	**Synchronously re-transmitted input pulse.** Output pulse is a duplicate of the Tachometer input pulse.
SCALEd	**Input pulse scaled prior to re-transmission.** Input pulse frequency may be divided to produce output pulse with defined duration by the diUidE and durAtion functions.

Using the ▼ or ▲ push button select SourCE in the pulse output sub-menu and press P to reveal the existing pulse source. The source can be changed by pressing the ▼ or ▲ push button followed by the E button to return to SourCE prompt.

9.5.5 Divide output pulse frequency: diUidE

When SCALEd is selected in the SourCE function described in section 9.5.4, the output pulse frequency is the Tachometer input pulse frequency divided by one of the following:

1
10
100
1000
10000

Using the ▼ or ▲ push button select diUidE in the pulse output sub-menu and press P to reveal the existing divisor. The value can be changed by pressing the ▼ or ▲ push button to select the required value followed by the E button to return to diUidE prompt.

Note: This function only appears in the pulse output sub-menu when SCALEd is selected in the SourCE function.

9.5.6 Output pulse width: durAtion

When SCALEd is selected in the SourCE function as described in section 9.5.4, the output pulse width in milliseconds is defined by this function. One of 11 pulse widths may be selected:

0.1
0.5
1
2.5
5
10
25
50
100
250
500

Using the ▼ or ▲ push button select durAtion in the pulse output sub-menu and press P to reveal the existing pulse duration. The value can be changed by pressing the ▼ or ▲ push button to select the required value followed by the E button to return to durAtion prompt.

Note: This function only appears in the pulse output sub-menu when SCALEd is selected in the SourCE function.

9.5.7 Pulse storage

If the diVidE and durAtion functions are configured such that the output pulse frequency with the specified pulse width can not be output in real time, the number of pulses will be stored and transmitted at the maximum possible speed.

When the total display is reset to zero or the power supply to the Tachometer is disconnected or turned off, any stored pulses will not be retained.

9.6 4/20mA output

The BA317NE Tachometer can be supplied with a factory fitted galvanically isolated 4/20mA output which may be conditioned to represent any part of the Tachometer speed display. Only one output option can be fitted to a BA317NE.

9.6.1 Type nA certification

The optional 4/20mA output is a separate galvanically isolated Ex nA circuit with the following input parameters:

Ui = 30V dc

This allows the 4/20mA output to be connected to any dc circuit providing that in normal operation the maximum supply voltage is not greater than 30V dc..

Providing that the BA317NE Tachometer is correctly installed in a panel enclosure located in Zone 2 complying with the requirements for Ex n protection, the 4/20mA current output may be used to transmit to suitably protected equipment located in Zone 1 or 2 of a hazardous area, or to equipment located in a safe area.

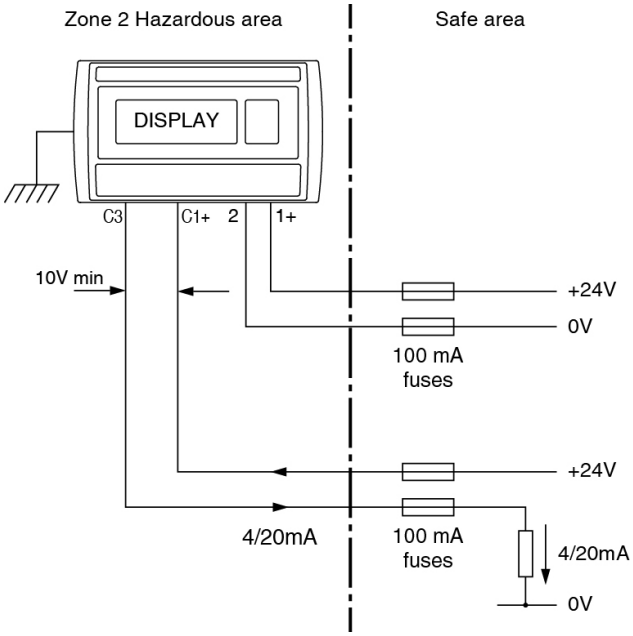

Fig 19 Application of 4/20mA output
(Shown without recommended screened cables)

Fig 19 shows a typical application in which a BA317NE Tachometer is mounted in an Ex n panel enclosure located in Zone 2 is retransmitting the 4/20mA current to the safe area.

To comply with the requirements of EN 60079-14 *Electrical installations design, selection and erection*, each of the wires entering the hazardous area should be individually fused and contain a means of isolation. These two requirements may be satisfied by installing DIN rail mounted terminals incorporating a fuse which can easily be opened as shown in Fig 2 to provide isolation. Clear identification of, and easy access to the means of isolation is essential for their effective use. It is also necessary to ensure that the maintenance procedure makes sure that unauthorised re-closure of the switches does not occur. It is not considered necessary to have a means of isolation or electrical protection for cable screens.

For some application Ex nA instrumentation energised by a current limited power supply or instrument that can be switched off, is often considered adequate and to comply with the requirements of the standard.

9.6.2 Configuration

When a Tachometer is supplied with an optional 4/20mA output the configuration menu is extended as shown in Fig 20. The 4/20mA output sub-menu is accessed via the 4-20 oP function that is located before the CLr.Gtot function.

The 4/20mA output is controlled by the Tachometer speed display, the speeds corresponding to 4 and 20mA output are defined in the sub-menu.

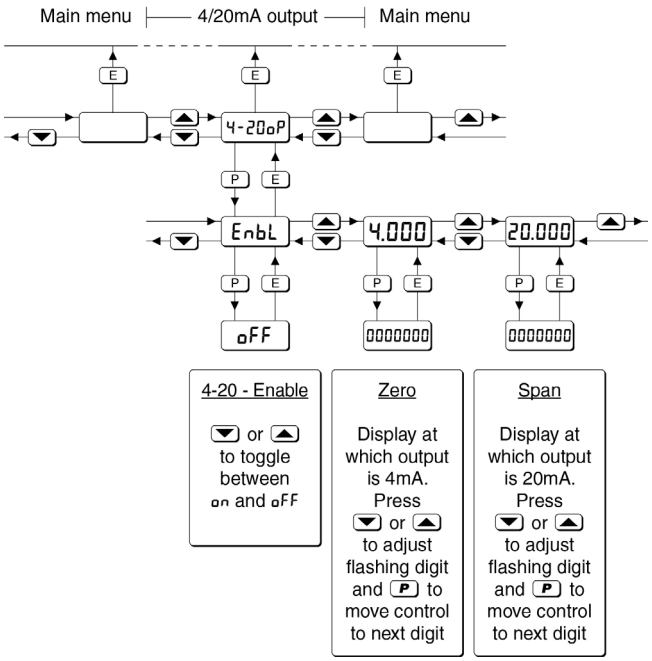

Fig 20 4/20mA output configuration sub-menu

9.6.3 Access 4/20mA output sub-menu: 4-20 oP

Access the Tachometer configuration menu as described in section 6.2. Using the ▼ and ▲ push buttons scroll though the menu until 4-20 oP is displayed, pressing P will then access the 4/20mA output sub-menu which is shown in Fig 20.

9.6.4 Enable 4/20mA output: EnbL

This function allows the 4/20mA output to be disabled or enabled without altering any of the 4/20mA output parameters. Using the ▼ or ▲ push button select EnbL in the 4-20 oP sub-menu and press P to reveal the existing setting on or oFF. The function can be changed by pressing the ▼ or ▲ push button followed by the E button to return to EnbL prompt.

Note: When the 4/20mA output is disabled by selecting oFF, the output is a constant 3.5mA irrespective of the instrument display.

9.6.5 Display which corresponds to 4mA output: 4.000

The Tachometer speed display which corresponds to a 4.000mA output current is defined by this function. Using the ▼ or ▲ push button select 4.000 in the 4/20mA output sub-menu and press P to reveal the existing speed display with one digit flashing. The required display can be entered using the ▼ or ▲ push button to adjust the flashing digit and the P button to transfer control to the next digit. When set as required, press E to enter the value and return to the 4.000 prompt in the 4/20mA output sub-menu.

9.6.6 Display which corresponds to 20mA output: 20.000

The Tachometer speed display which corresponds to a 20.000mA output current is defined by this function. Using the ▼ or ▲ push button select 20.000 in the 4/20mA output sub-menu and press P to reveal the existing speed display with one digit flashing. The required display can be entered using the ▼ or ▲ push button to adjust the flashing digit and the P button to transfer control to the next digit. When set as required, press E to enter the value and return to the 20.000 prompt in the 4/20mA output sub-menu.

Notes:

1. If the Tachometer calibration is changed the 4/20mA output will automatically be set to 3.5mA irrespective of the speed display. The 4/20mA output should always be reconfigured following changes to the Tachometer configuration.

2. If the Tachometer and the 4/20mA current sink output are powered from separate supplies, the 4/20mA output current will continue to flow when the Tachometer supply fails or is turned off. Powering both from a common supply eliminates this effect.

Appendix 1
Dust certification

A1.0 ATEX dust certification

In addition to ATEX Ex nA certification permitting installation in explosive gas atmospheres which is described in the main section of this instruction manual, all BA317NE Tachometers have ATEX dust ignition protection by enclosure certification Ex tc permitting installation in combustible dust atmospheres. The front panel push button switches are non incendive and have been certified intrinsically safe Ex ic without the need for Zener barriers or galvanic isolators.

This appendix describes ATEX installations in explosive dust atmospheres conforming with EN 60079-14 *Electrical installations design, selection and erection*. When designing systems for installation outside the UK the local Code of Practice should be consulted.

The Tachometer's Ex tc dust input and output safety parameters are identical to the Ex nA gas parameters, therefore all the electrical circuits shown in the main section of this manual may also be used for dust applications.

A1.1 Zones, and Maximum Surface Temperature

The BA317NE has been ATEX dust certified

Group II, Category 3D
Ex ic tc IIIC T80ºC Dc -40 ≤ Ta ≤ 60°C

When connected to a suitable system the Tachometer may be installed in:

Zone 22 explosive atmosphere in the form of a cloud of combustible dust in air is not likely to occur in normal operation, but if it does occur, will only persist for a short period.

Be used with dust in subdivisions:

IIIA	combustible flyings
IIIB	non-conductive dust
IIIC	conductive dust

Having a Minimum Ignition Temperature of:

Dust cloud	120°C
Dust layer on indicator up to 5mm thick	155°C
Dust layer on indicator over 5mm thick.	Refer to EN 60079-14

At an ambient temperature between -40 and +60°C

A1.2 Special conditions for safe use in dust atmospheres.

The BA317NE ATEX Type Examination Certificate has an 'X' suffix to show that special conditions for safe use are specified by the BA317NE Ex ic tc certificate indicated by the certificate number's 'X' suffix. These state that the BA317NE Tachometer should be:

a. Mounted such that the instrument terminals are protected by at least an IP54 enclosure certified to IEC 60079-15 or IEC 60079-0 as appropriate.
   Note: *An Ex t, Ex n, Ex e or Ex p certified enclosure satisfies this requirement.*

b. Instrument terminals must be supplied from limited energy circuits.
   Note: *This means that the BA317NE should only be connected to circuits with output parameters in normal operation equal to, or less than the instruments input parameters which are the same as the Ex nA input parameters specified in section 3 of this manual.*

A1.3 Maintenance

The IEC guidance on maintenance procedures EN 60079-17 permits live maintenance in Zone 22 if a risk analysis demonstrates that this does not introduce an unacceptable risk. The removal of covers [opening of Ex tc enclosure] is permitted if this can be done without contaminating the interior of the enclosure and instrument with dust or moisture. Some end-users may prefer not to permit live maintenance to minimise risk.

ENSURE PLANT SAFETY BEFORE STARTING MAINTENANCE

Live maintenance within the hazardous area should only be performed when it is permitted by risk analysis or when there is no risk of a flammable atmosphere being present.

Before closing the Ex tc enclosure ensure that the sealing gaskets are undamaged and free from dirt and foreign bodies.

Inspection of the Tachometer's mechanical condition and removal of accumulated dust from the front of the instrument and the outside of the enclosure should be regularly performed. The interval between inspections depends upon environmental conditions. Removal of flammable dust should be performed with care to avoid creating a dust cloud.

Appendix 2 IECEx certification

A2.0 The IECEx Certification Scheme

IECEx is a global certification scheme for explosion protected products which aims to harmonise international certification standards. For additional information about the IECEx certification scheme and to view the BEKA associate certificates, please visit www.iecex.com

A2.1 IECEx Certificate of Conformity

The BA317NE Tachometer has been issued with an IECEx Certificate of Conformity number IECEx ITS 16.0005X which specifies the following certification code:

Ex nA ic IIC T5 Gc -40ºC ≤ Ta ≤ +60ºC
Ex ic tc IIIC T80ºC Dc IP66 ≤ Ta ≤ 60°C

The IECEx certificate may be downloaded from www.beka.co.uk, www.iecex.com or requested from the BEKA sales office.

The Tachometer's front panel push button contacts are non incendive and have been certified intrinsically safe Ex ic, without the need for an external Zener barrier or galvanic isolator, as shown on the IECEx Certificate. This allows the Tachometer to be adjusted and configured live when installed in a Ex n panel enclosure located in Zone 2.

A2.2 Installation

The IECEx safety parameters are identical to the ATEX safety parameters described in the main section of this manual and both refer to equivalent standards. Therefore the ATEX installation requirements specified in the main sections and in Appendix 1 of this manual, also apply for IECEx installations, but the local code of practice should also be consulted.

For ATEX installations self certified Category 3GD equipment, such as enclosures, may be installed in Zone 2 or 22, but self certified equipment is not permitted for IECEx installations.

A2.3 Special conditions for safe use

The IECEx certificate number has an ‘X’ suffix indicating that special conditions apply for safe use. These conditions are identical to the ATEX special conditions for safe use specified in the main sections and in Appendix 1 of this manual.

Appendix 3 ETL & cETL certification for installations in USA and Canada

A3.0 cETL Mark

For installations in the USA and Canada, the BA317NE Tachometer has ETL and cETL Ex nA and Ex tc approval, Control Number 4008610. Copies of the Authorisation to Mark are available from the BEKA associates sales office and www.beka.co.uk

A3.1 ETL and cETL certification

The US and Canadian standards used for assessment and certification of the BA317NE are listed on the cETL Authorisation to Mark.

The ETL and cETL safety parameters are the same as the ATEX and IECEx parameters, the systems shown in sections 3, 4 and 5 of this manual may therefore also be used for US and Canadian installations subject to complying with local codes of practice.

ETL and cETL codes

CL I Zone 2 AEx nA ic IIC T5 Gc (US gas, Zone cert)

Zone 22 AEx ic tc IIIC T80ºC Dc (US dust, Zone cert)

Ex nA ic IIC T5 Gc (Canadian gas, Zone cert)

Ex ic tc IIIC T80ºC Dc (Canadian dust, Zone cert)

-40ºC ≤ Ta ≤ 60ºC

The Tachometer's front panel push button contacts are non incendive and have been certified intrinsically safe Ex ic, without the need for an external Zener barrier or galvanic isolator, as shown on the ETL Authorisation to Mark. This allows the Tachometer to be adjusted and configured live when installed in a Ex n panel enclosure located in Zone 2.