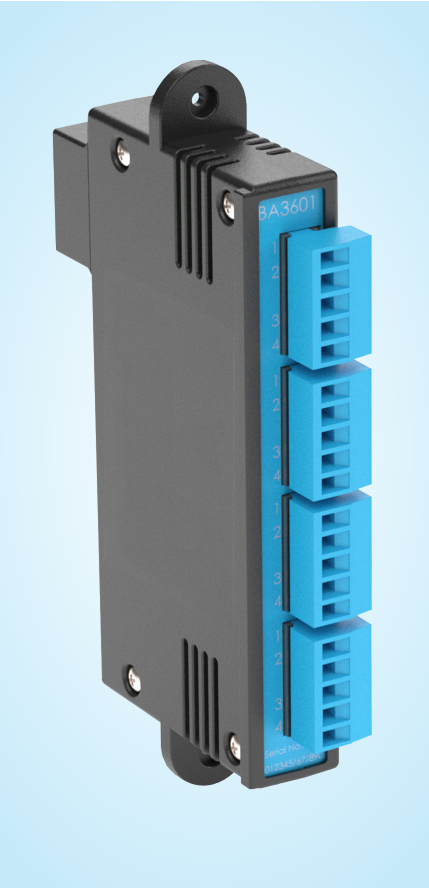

The Pageant BA3601 module has four isolated solid state contact outputs, each certified as a separate intrinsically safe circuit. The module is intended for switching intrinsically safe loads located in any hazardous area, or low power safe area loads via a Zener barrier or a galvanic isolator.

Separate apparatus certification for the module allows it to be safely plugged into any one of the seven slots on a Pageant BA3101 Operator Display without the need for additional certification or approval. If requirements change, a BA3601 module may be fitted on-site to an Operator Panel which has already been installed and commissioned.

This output module enables up to four hazardous area loads such as a solenoid valve, sounder, beacon or panel lamp to be controlled by a Pageant Operator Panel PLC output.

Each contact output is galvanically isolated from the other three outputs and from the Pageant operator panel's power supply allowing certification as a separate Ex ia circuit. The output safety parameters of each contact output are below those specified for simple apparatus and may be ignored when assessing the safety of most loops. This, together with the switch's low contact resistance and voltage drop, enables the switch to control almost any intrinsically safe load in any gas or dust hazardous Zone.

Hazardous area loads, such as sounders and beacons, should be powered from a compatible galvanic isolator or Zener barrier. Terminals 2 and 4 of each BA3601 input are internally linked for joining the return wire as shown below.

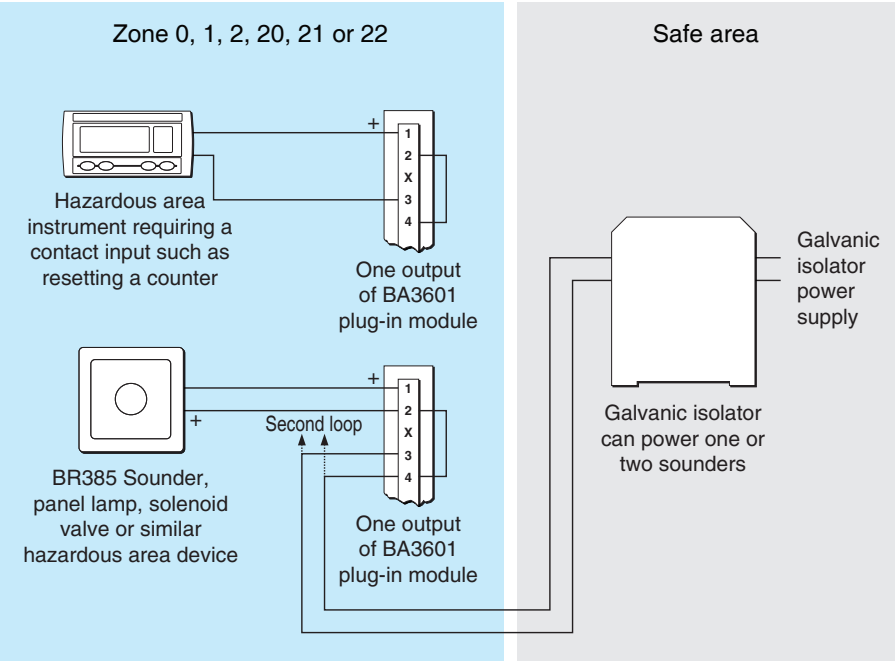

Typical applications

BA3601

Pageant Digital Output Module 4 x Contact

Each intrinsically safe output can switch a load in any gas or dust hazardous area

- **Four isolated solid state contact outputs.**
- **Module plugs into a Pageant BA3101 Ex ia intrinsically safe Operator Display.**
- **Each Ex ia output is a separate intrinsically safe circuit.**
- **IECEx, ATEX & UKEX Ex ia certification.**
- **3 year guarantee**

www.beka.co.uk/ba3601

BEKA associates Ltd. Old Charlton Rd. Hitchin, Hertfordshire, SG5 2DA, U.K.
Tel. (01462) 438301 e-mail sales@beka.co.uk
website: www.beka.co.uk

SPECIFICATION

Power supply From Pageant Operator Panel via CPU module

Module consumption 4% of available power

Output

Type Isolated unipolar solid state switch

Ron 5Ω + 0.7V max

Roff 1MΩ min

Speed Each output polled 10 times per second by the BA3101 Operator Panel.

Intrinsic safety

International IECEx

Code Ex ia IIC T4 Ga
Ex ia IIIC T135°C Da
-40°C ≤ Ta ≤ +65°C

Safety parameters for each output channel

Ui 30V
Ii 200mA
Pi 0.66W

Uo 1.38V *
Io 0*
Po 0*

Ci 0
Li 4μH

Cert. No. IECEx 21.0124X

* Output parameters are below the *simple apparatus* threshold and may be ignored for some applications.

Europe ATEX and UKEX

Code Group II Category 1GD
Ex ia IIC T4 Ga
Ex ia IIIC T135°C Da
-40°C ≤ Ta ≤ +65°C

Safety parameters for each input as IECEx

Cert. Nos. CML 21ATEX21097X
CML 21UKEX21098X

Environmental

Operating temp	-40 to +65°C
Storage temp	-40 to +85°C
Enclosure	IP20
Material	Noryl UL94V-1 flame class rating
Humidity	To 95% at 40°C non- condensing
EMC	Complies with UK & European Directives

Mechanical

Terminals Screw clamp for 0.5 to 1.5mm² cable with blue removable terminal block for each channel.

Weight 0.15kg

DIMENSIONS (mm)

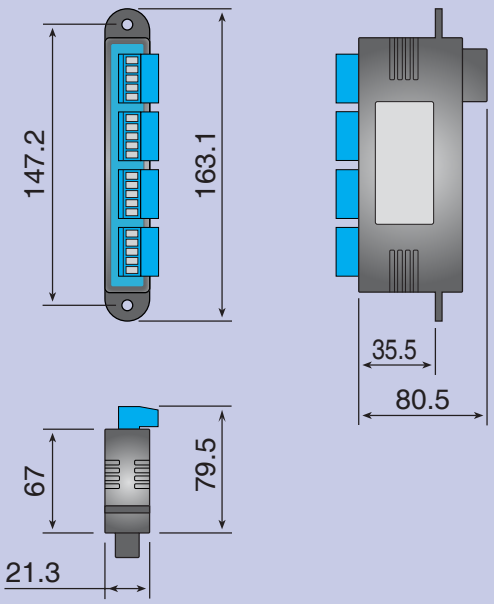

TERMINAL CONNECTIONS

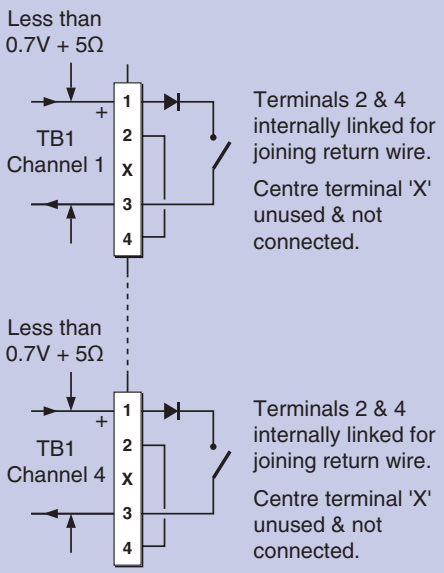

Reliability is ensured by component conformal coating, protection from incorrect connection and radio frequency interference. The module has been subjected to extensive vibration and thermal testing and is supported by a three year guarantee.

HOW TO ORDER

	Please specify
Model number	BA3601