THIRD ANGLE PROJECTION DIMENSIONS IN mm DO NOT SCALE

* IF TAG OR SCALE INFORMATION IS NOT SUPPLIED THESE WILL BE LEFT BLANK.

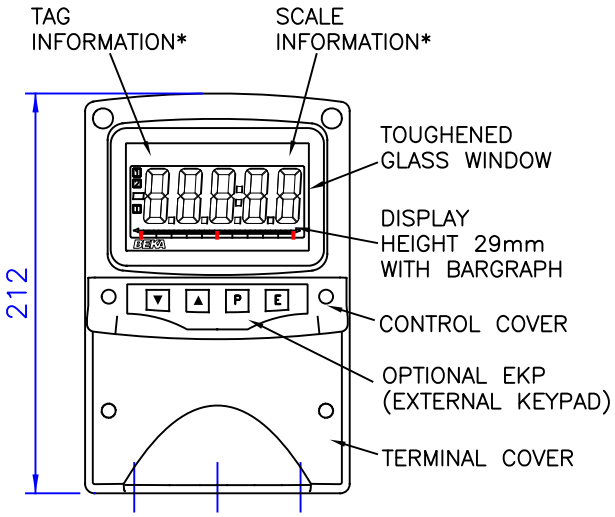

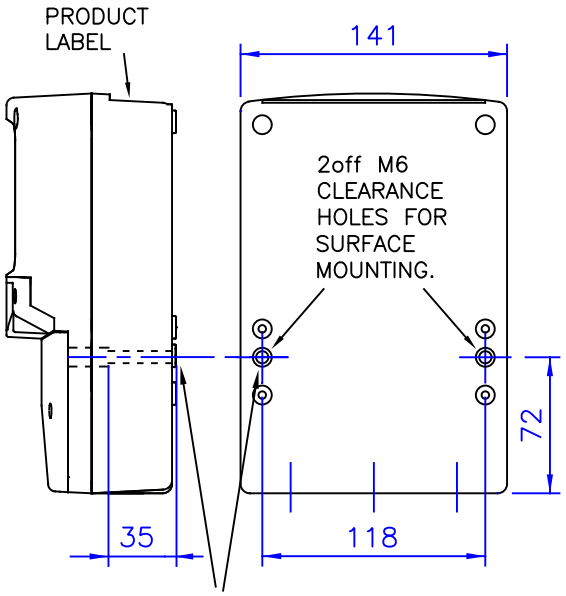

MOUNTING DIMENSIONS:
2off M6 CLEARANCE HOLES SUITABLE FOR SCREW WITH HEAD DIAMETER 12 MAX

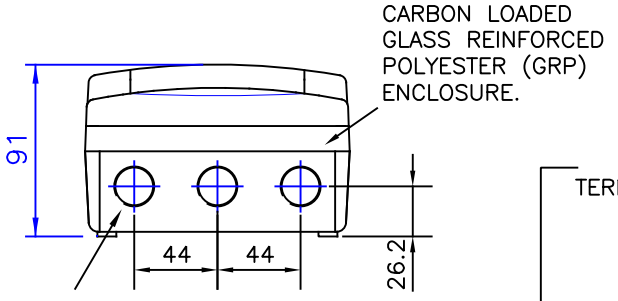

ENCLOSURE WITH TERMINAL AND CONTROL COVERS REMOVED

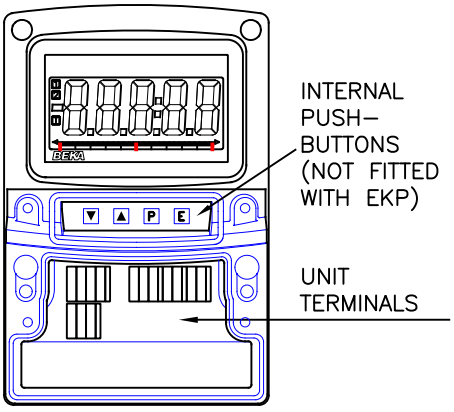

TERMINAL CONNECTIONS:

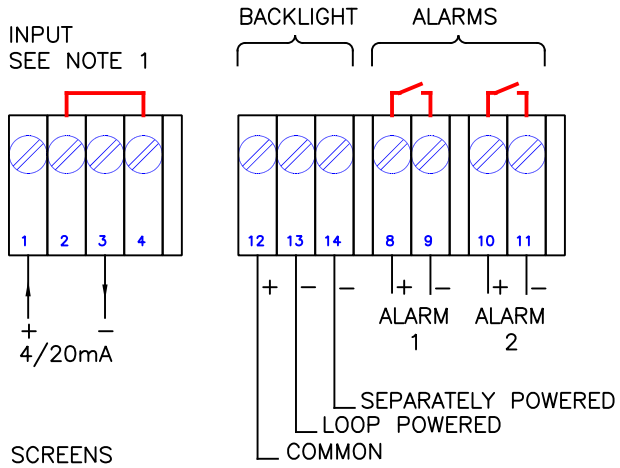

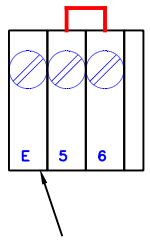

NOTES:

1 TERMINALS 2 & 4 ARE INTERNALLY LINKED FOR JOINING RETURN WIRES

2 TERMINALS 5 & 6 ARE INTERNALLY LINKED FOR JOINING CABLE SCREENS

BEKA associates Hitchin England company confidential, copyright reserved.

Iss.	Date	Modification	Ckd.	Appd.
1	01.12 2011	.	AMH	AC

Title	Drawn	Checked	Scale
CUSTOMER DRAWING for BA524E 5 DIGIT INDICATOR IN FIELD MOUNTING ENCLOSURE	RC	AMH	NTS
	Drawing No. CD524E		