THIRD ANGLE PROJECTION DIMENSIONS IN mm DO NOT SCALE

* IF TAG OR SCALE INFORMATION IS NOT SUPPLIED THESE WILL BE LEFT BLANK.

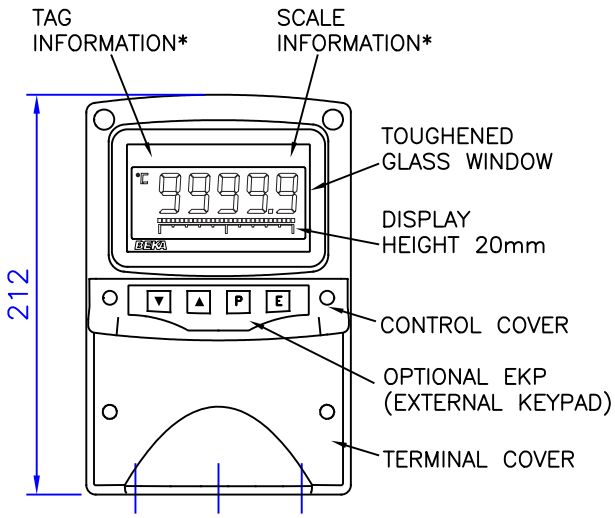

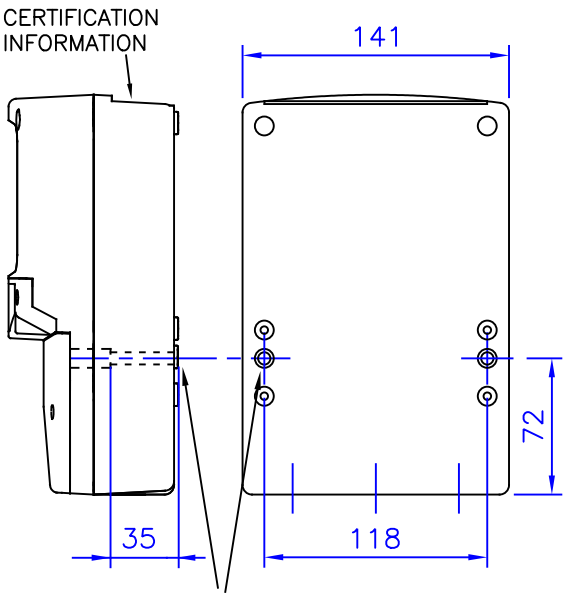

MOUNTING DIMENSIONS:
2off M6 CLEARANCE HOLES SUITABLE FOR SCREW WITH HEAD DIAMETER 12 MAX

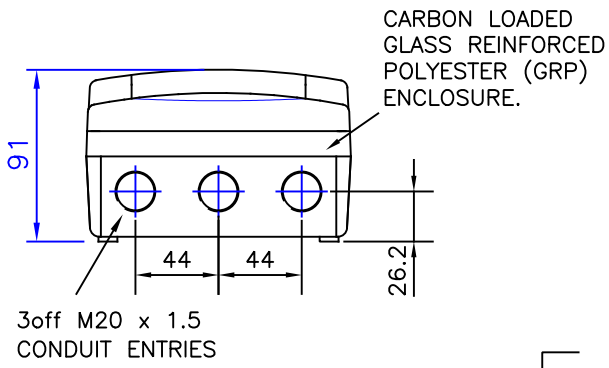

ENCLOSURE WITH TERMINAL AND CONTROL COVERS REMOVED

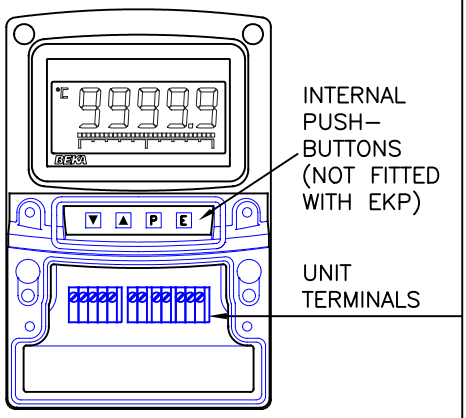

TERMINAL CONNECTIONS:

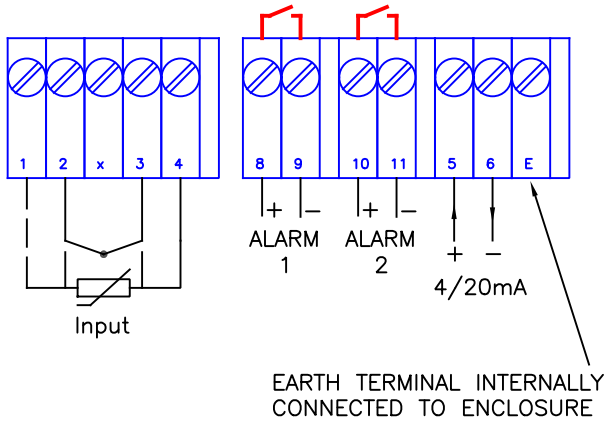

Iss.	Date	Modification	Ckd.	Appd.
1	20.07.2017	.	.	.

BEKA associates Hitchin England
company confidential, copyright reserved.

Title
CUSTOMER DRAWING for
BA474ND TYPE N INDICATING TEMPERATURE TRANSMITTER IN FIELD MOUNTING ENCLOSURE

Drawn	Checked	Scale
RH	.	NTS

Drawing No. CD474ND