THIRD ANGLE PROJECTION DIMENSIONS IN mm DO NOT SCALE

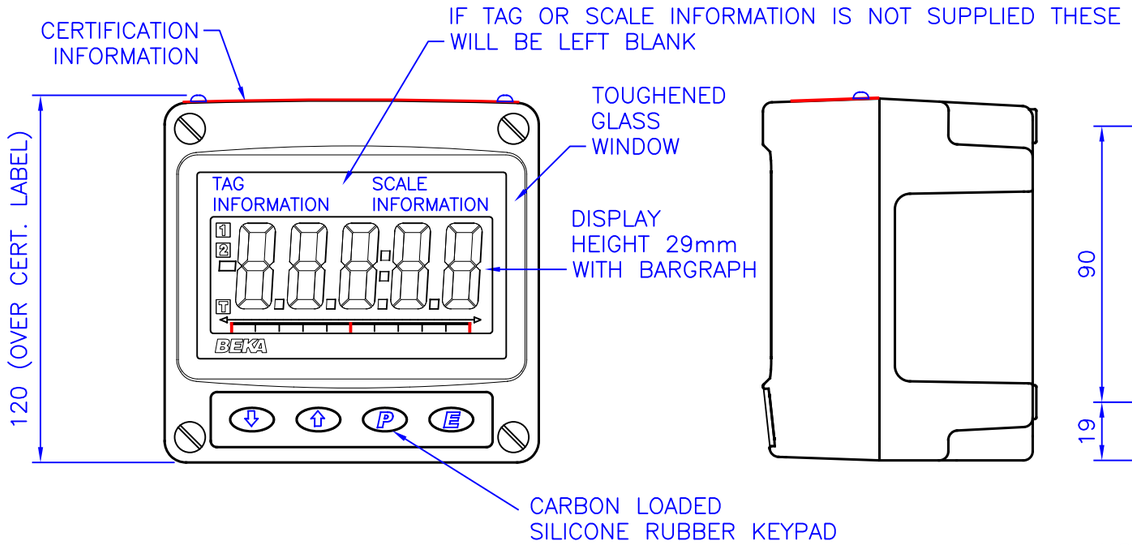

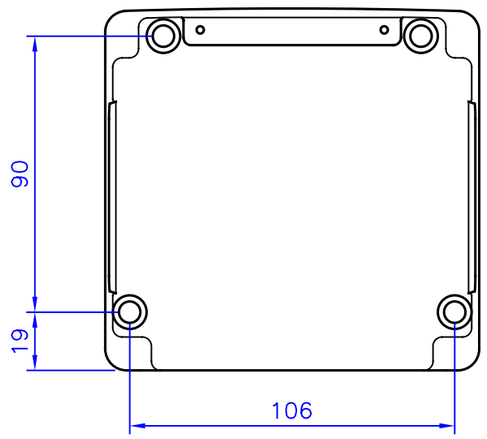

MOUNTING DIMENSIONS:
4 OFF ø6.5mm CLEARANCE HOLES
SUITABLE FOR SCREWS WITH HEAD ø10mm MAX.
(M5 PAN HEAD OR M6 CHEESE HEAD)

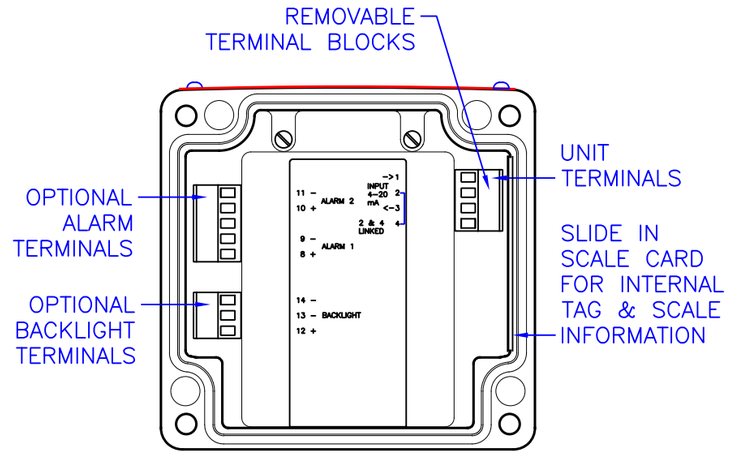

REAR VIEW OF FRONT
SHOWING TERMINAL CONNECTIONS
ALARM & BACKLIGHT ARE OPTIONAL

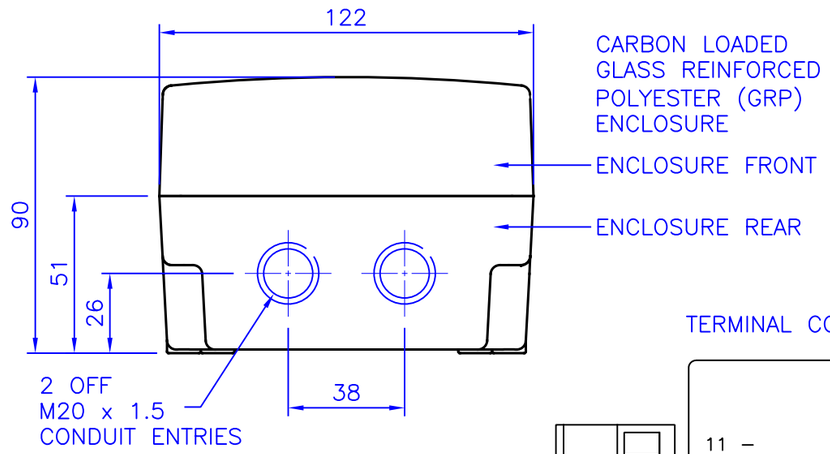

TERMINAL CONNECTIONS:

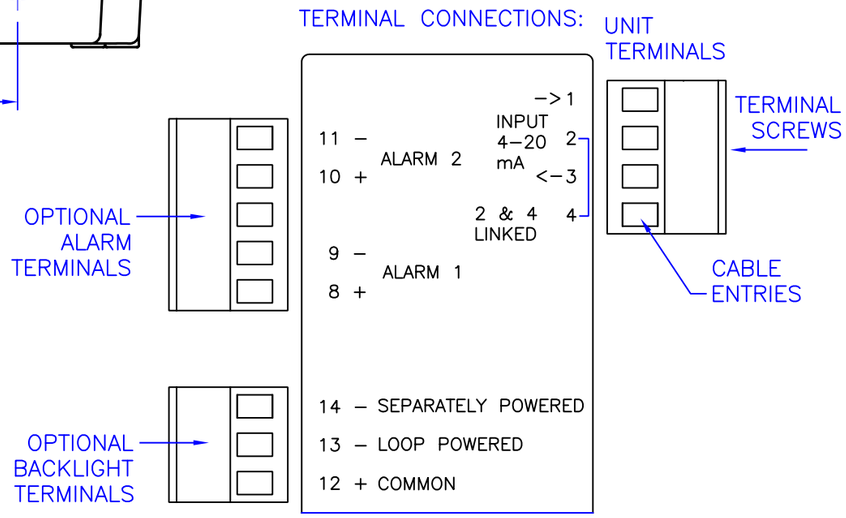

VIEWS OF REAR CASE WITH FRONT REMOVED

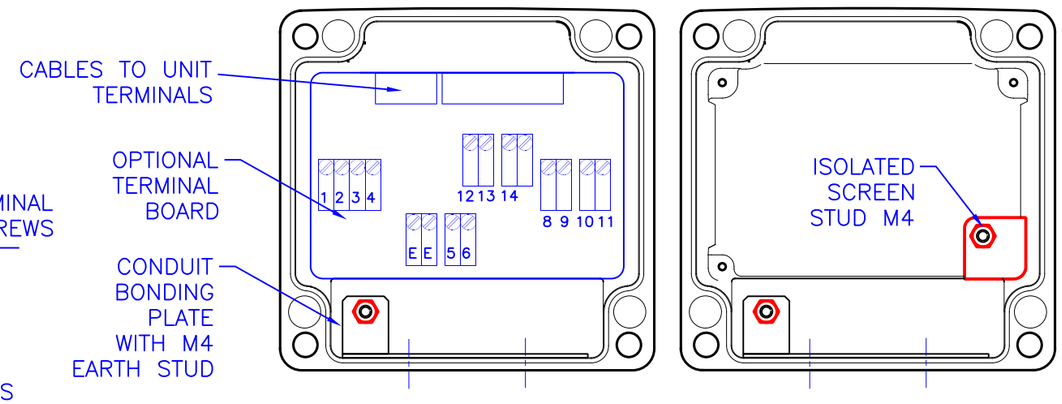

WITH OPTIONAL TERMINAL BOARD WITH ISOLATED STUD FOR CABLE SCREENS

NOTE:
TERMINALS 2 & 4 ARE INTERNALLY LINKED FOR JOINING RETURN WIRES.

FOR OPTIONAL TERMINAL BOARD ONLY:
TERMINALS E ARE INTERNALLY CONNECTED TO THE ENCLOSURE.
TERMINALS 5 & 6 ARE INTERNALLY LINKED FOR JOINING CABLE SCREENS

Iss.	Date	Modification	Ckd.	Appd.
2	11.04 2017	CRN1613. Screen stud added.		
1	28.04 2016	P0172. First release.	.	.

BEKA associates
Hitchin England
company confidential, copyright reserved.

Title: CUSTOMER DRAWING for BA324NG 5 DIGIT I.S. INDICATOR IN FIELD MOUNTING ENCLOSURE

Drawn	Checked	Scale
RC	.	N/A

Drawing No. CD324NG
Sheet 1 of 1